A Division of Spang & Company

Specification for:

PCB15104A

110 Delta Drive
Pittsburgh, PA 15238
Phone: 412/696-1333
Fax: 412/696-0333
Email:magnetics@spang.com

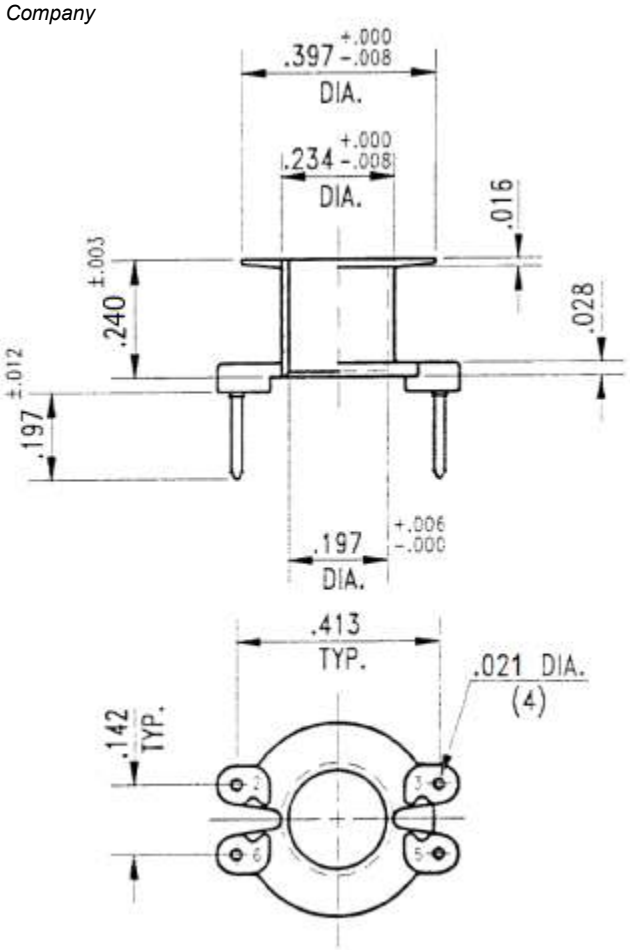

MATERIAL

Material: Thermoset 94 V0; Color Green

Pin Material: Phosphor Bronze, Tin Plated.

REMARKS

Revision -