A Division of Spang & Company

Specification for:

FR42014IC

110 Delta Drive
Pittsburgh, PA 15238
Phone: 412/696-1333
Fax: 412/696-0333
Email:magnetics@spang.com

DIMENSIONS

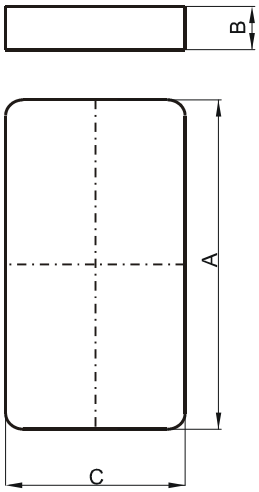

(mm)	Nominal:	Tol. min.:	Tol. max.:
A	20.0	-0.35	+ 0.35
B	1.9	-0.05	+ 0.05
C	14.0	-0.3	+ 0.3
Eff. Parameters (with F_42014EC)			
Ae mm ^{2}	**Amin mm ^{2}**	**le mm**	**Ve mm ^{3}**
57.3	52.5	25.5	1460

INDUCTANCE

AL value (nH)	Test conditions (with FR42014EC)
Nom: 4479 Min.: 3359	10 kHz, < 0.5 mT, 25 ℃

MARKING

R
IC

CORE LOSSES

P_l max	Test conditions
89 mW/cm³ (0.13 W/set)	100 kHz, 100 mT, 100 ℃
616 mW/cm³ (0.9 W/set)	100 kHz, 200 mT, 100 ℃

A Division of Spang & Company

Specification for:

FF-42014-IC

110 Delta Drive
Pittsburgh, PA 15238
Phone: 412/696-1333
Fax: 412/696-0333
Email:magnetics@spang.com

DIMENSIONS

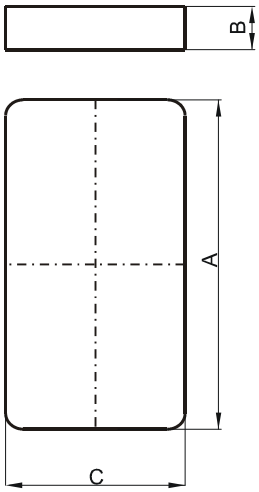

(mm)	Nominal:	Tol. min.:	Tol. max.:
A	20.0	-0.35	+ 0.35
B	1.9	-0.05	+ 0.05
C	14.0	-0.3	+ 0.3
Eff. Parameters (with F_42014EC)			
Ae mm ^{2}	**Amin mm ^{2}**	**le mm**	**Ve mm ^{3}**
57.3	52.5	25.5	1460

INDUCTANCE

AL value (nH)	Test conditions (with FF42014EC)
5338 ± 25%	10 kHz, < 0.5 mT, 25 ℃

MARKING

F
IC

CORE LOSSES

P_l max	Test conditions
212 mW/cm³ (0.31 W/set)	25 kHz, 200 mT, 100 ℃

A Division of Spang & Company

Specification for:

FP-42014-IC

110 Delta Drive
Pittsburgh, PA 15238
Phone: 412/696-1333
Fax: 412/696-0333
Email:magnetics@spang.com

DIMENSIONS

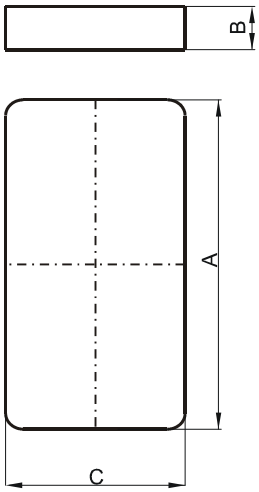

(mm)	Nominal:	Tol. min.:	Tol. max.:
A	20.0	-0.35	+ 0.35
B	1.9	-0.05	+ 0.05
C	14.0	-0.3	+ 0.3
Eff. Parameters (with F_42014EC)			
Ae mm ^{2}	**Amin mm ^{2}**	**le mm**	**Ve mm ^{3}**
57.3	52.5	25.5	1460

INDUCTANCE

AL value (nH)	Test conditions (with FP42014EC)
Nom: 4740 Min.: 3555	10 kHz, < 0.5 mT, 25 ℃

MARKING

P IC

CORE LOSSES

P_l max	Test conditions
110 mW/cm³ (0.16 W/set)	100 kHz, 100 mT, 100 ℃

A Division of Spang & Company

Specification for:

0F-40704-UG

110 Delta Drive
Pittsburgh, PA 15238
Phone: 412/696-1333
Fax: 412/696-0333
Email:magnetics@spang.com

DIMENSIONS

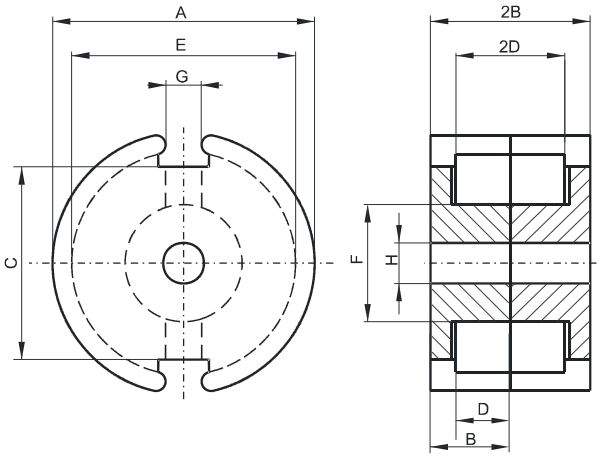

(mm)	Nominal:	Tol. min.:	Tol. max.:
A	7.24	-0.15	+ 0.15
B	2.08	-0.05	+ 0.05
2B	4.16	-0.1	+ 0.1
C	4.72		
D	1.4 Min.		
2D	2.79 Min.		
E	5.74 Min.		
F	3.0 Max.		
G	1.52 Min.		
H	1.09	-0.05	+ 0.05
Eff. Parameters			
Ae mm ^{2}	**Amin mm ^{2}**	**le mm**	**Ve mm ^{3}**
7.0	5.9	9.9	69

INDUCTANCE

AL value (nH)	Test conditions
1200 ± 25%	10 kHz, < 0.5 mT, 25 ℃

MARKING

No marking

CORE LOSSES

P_l max	Test conditions
228 mW/cm³ (0.18 W/set)	25 kHz, 200 mT, 100 ℃

NOTE

Spec. modifications	Previous	Revised
2005-06-22	Losses: General F material	Losses: Detail as indicated

A Division of Spang & Company

Specification for:

0W-40905-UG

110 Delta Drive
Pittsburgh, PA 15238
Phone: 412/696-1333
Fax: 412/696-0333
Email:magnetics@spang.com

DIMENSIONS

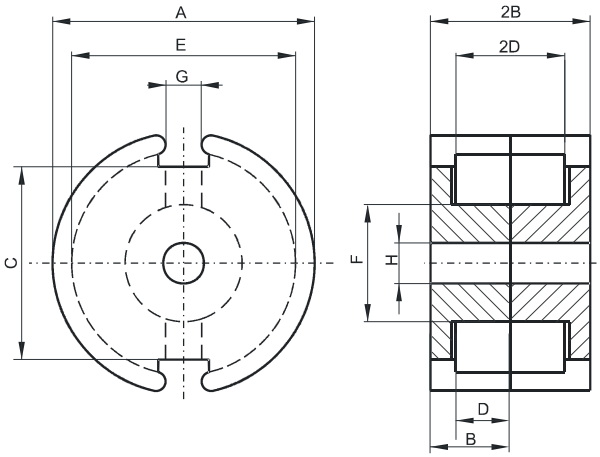

(mm)	Nominal:	Tol. min.:	Tol. max.:
A	9.3	-0.3	0.0
B	2.7	-0.15	0.0
2B	5.4	-0.3	0.0
C	6.5	-0.25	+ 0.25
D	1.8	0.0	+ 0.15
2D	3.6	0.0	+ 0.3
E	7.5	0.0	+ 0.25
F	3.9	-0.2	0.0
G	2.0	-0.2	+ 0.2
H	2.04	0.0	+ 0.06
Eff. Parameters			
Ae mm ^{2}	**Amin mm ^{2}**	**le mm**	**Ve mm ^{3}**
10.1	8.0	12.5	126

INDUCTANCE

AL value (nH)	Test conditions
Nom: 6029 Min.: 4220	10 kHz, < 0.5 mT, 25 ℃

MARKING

No marking

LOSS FACTOR

tan δ/μ (x10^{-6})	Test conditions
< 3	10 kHz, < 0.25 mT, 25 ℃
< 45	100 kHz, < 0.25 mT, 25 ℃

NOTE

Spec. modifications	Previous	Revised
2005-06-22	B=2.57 Min. 2B=5.14 Min. C=5.14 Min. F=3.88 Max. G=1.93 Nom. G=1.78 Min. H=2.01±0.05 Loss factor: General W material Marking	B=2.55 Min. 2B=5.1 Min. C=6.5 Nom. F=3.9 Max. G=2.0±0.2 H=2.04 Min. H=2.1 Max. Loss factor: Detail as indicated No marking

A Division of Spang & Company

Specification for:

0R-41106-IC

110 Delta Drive
Pittsburgh, PA 15238
Phone: 412/696-1333
Fax: 412/696-0333
Email:magnetics@spang.com

DIMENSIONS

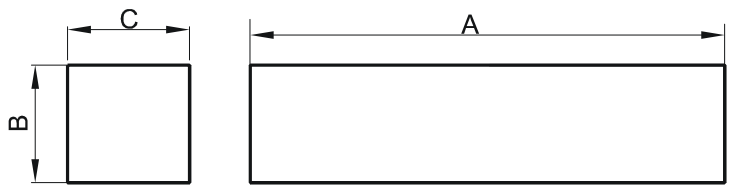

(mm)	Nominal:	Tol. min.:	Tol. max.:
A	10.8	-0.2	+ 0.2
B	1.83	-0.12	+ 0.12
C	6.3	-0.13	+ 0.13
Eff. Parameters (with 0_41106UC)			
Ae mm ^{2}	**Amin mm ^{2}**	**le mm**	**Ve mm ^{3}**
11.5	11.5	24.6	283

INDUCTANCE

AL value (nH)	Test conditions (with 0R41106UC)
Nom: 1027 Min.: 710	10 kHz, < 0.5 mT, 25 ℃

MARKING

No marking

CORE LOSSES

P_l max	Test conditions
95 mW/cm³ (0.027 W/set)	100 kHz, 100 mT, 100 ℃
565 mW/cm³ (0.16 W/set)	100 kHz, 200 mT, 100 ℃

NOTE

Spec. modifications	Previous	Revised
2005-06-22	A=10.64 Min. Losses: General R material	A=10.60 Min. Losses: Detail as indicated

A Division of Spang & Company

Specification for:

0F-41106-IC

110 Delta Drive
Pittsburgh, PA 15238
Phone: 412/696-1333
Fax: 412/696-0333
Email:magnetics@spang.com

DIMENSIONS

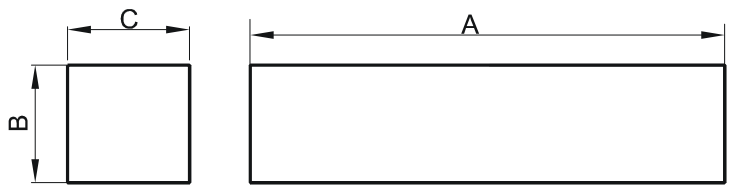

(mm)	Nominal:	Tol. min.:	Tol. max.:
A	10.8	-0.2	+ 0.2
B	1.83	-0.12	+ 0.12
C	6.3	-0.13	+ 0.13
Eff. Parameters (with 0_41106UC)			
Ae mm ^{2}	**Amin mm ^{2}**	**le mm**	**Ve mm ^{3}**
11.5	11.5	24.6	283

INDUCTANCE

AL value (nH)	Test conditions (with 0F41106UC)
1150 ± 25%	10 kHz, < 0.5 mT, 25 ℃

MARKING

No marking

CORE LOSSES

P_l max	Test conditions
212 mW/cm³ (0.06 W/set)	25 kHz, 200 mT, 100 ℃

NOTE

Spec. modifications	Previous	Revised
2005-06-22	A=10.64 Min. Losses: General F material	A=10.60 Min. Losses: Detail as indicated

A Division of Spang & Company

Specification for:

0P-41106-IC

110 Delta Drive
Pittsburgh, PA 15238
Phone: 412/696-1333
Fax: 412/696-0333
Email:magnetics@spang.com

DIMENSIONS

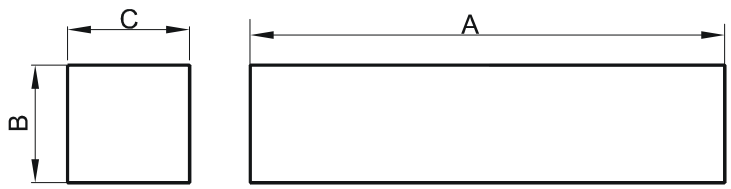

(mm)	Nominal:	Tol. min.:	Tol. max.:
A	10.8	-0.2	+ 0.2
B	1.83	-0.12	+ 0.12
C	6.3	-0.13	+ 0.13
Eff. Parameters (with 0_41106UC)			
Ae mm ^{2}	**Amin mm ^{2}**	**le mm**	**Ve mm ^{3}**
11.5	11.5	24.6	283

INDUCTANCE

AL value (nH)	Test conditions (with 0P41106UC)
Nom: 1022 Min.: 770	10 kHz, < 0.5 mT, 25 ℃

MARKING

No marking

CORE LOSSES

P_l max	Test conditions
120 mW/cm³ (0.034 W/set)	100 kHz, 100 mT, 100 ℃

NOTE

Spec. modifications	Previous	Revised
2005-06-22	A=10.64 Min. Losses: General P material	A=10.60 Min. Losses: Detail as indicated

A Division of Spang & Company

Specification for:

0J-41107-UG

110 Delta Drive
Pittsburgh, PA 15238
Phone: 412/696-1333
Fax: 412/696-0333
Email:magnetics@spang.com

DIMENSIONS

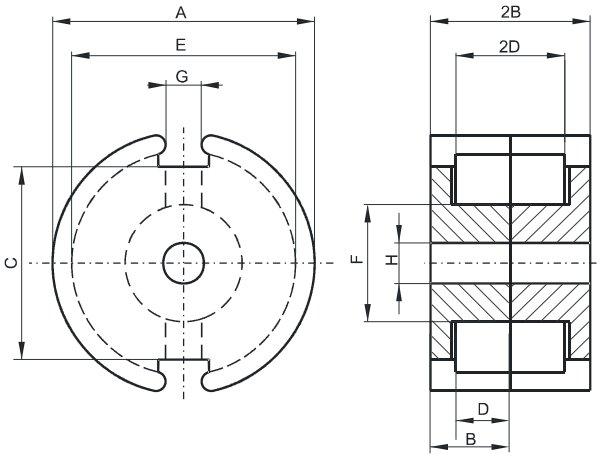

(mm)	Nominal:	Tol. min.:	Tol. max.:
A	11.1	-0.2	+ 0.2
B	3.25	-0.05	+ 0.05
2B	6.5	-0.1	+ 0.1
C	6.8	-0.25	+ 0.25
D	2.2	0.0	+ 0.15
2D	4.4	0.0	+ 0.3
E	9.0	0.0	+ 0.4
F	4.7	-0.2	0.0
G	2.2	-0.3	+ 0.3
H	2.1	-0.1	+ 0.1
Eff. Parameters			
Ae mm ^{2}	**Amin mm ^{2}**	**le mm**	**Ve mm ^{3}**
16.2	13.2	15.5	251

INDUCTANCE

AL value (nH)	Test conditions
Nom: 3900 Min.: 2925	10 kHz, < 0.5 mT, 25 ℃

MARKING

No marking

LOSS FACTOR

tan δ/μ (x10^{-6})	Test conditions
< 15	100 kHz, < 0.25 mT, 25 ℃

NOTE

Spec. modifications	Previous	Revised
2005-06-22	C=7.54 Nom. D=2.24 Min. 2D=4.42 Min. G=1.93 Nom. G=1.78 Min. H=2.06±0.05 Loss factor: General J material Marking	C=6.8±0.25 D=2.20 Min. 2D=4.40 Min. G=2.2±0.3 H=2.1±0.1 Loss factor: Detail as indicated No mrking

A Division of Spang & Company

Specification for:

0R-41109-UG

110 Delta Drive
Pittsburgh, PA 15238
Phone: 412/696-1333
Fax: 412/696-0333
Email:magnetics@spang.com

DIMENSIONS

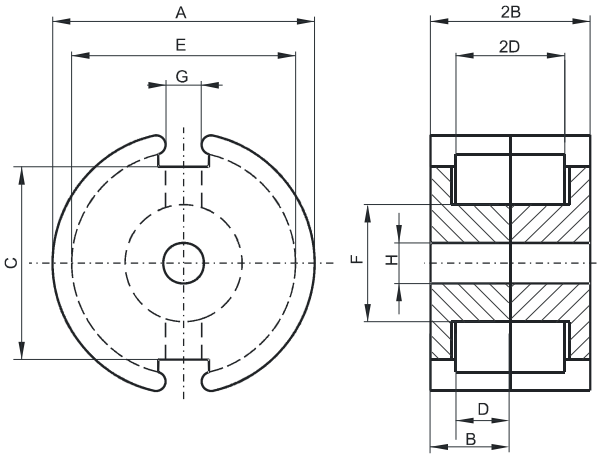

(mm)	Nominal:	Tol. min.:	Tol. max.:
A	11.28	-0.4	0.0
B	3.43	-0.08	+ 0.08
2B	6.86	-0.16	+ 0.16
C	7.54	-0.2	+ 0.2
D	2.48	-0.08	+ 0.08
2D	4.96	-0.16	+ 0.16
E	9.0	0.0	+ 0.4
F	4.7	-0.2	0.0
G	1.8	0.0	+ 0.3
H	2.0	0.0	+ 0.08
Eff. Parameters			
Ae mm ^{2}	**Amin mm ^{2}**	**le mm**	**Ve mm ^{3}**
16.3	13.2	16.2	264

INDUCTANCE

AL value (nH)	Test conditions
Nom: 1467 Min.: 1100	10 kHz, < 0.5 mT, 25 ℃

MARKING

No marking

CORE LOSSES

P_l max	Test conditions
95 mW/cm³ (0.025 W/set)	100 kHz, 100 mT, 100 ℃
492 mW/cm³ (0.13 W/set)	100 kHz, 200 mT, 100 ℃

NOTE

Spec. modifications	Previous	Revised
2005-06-22	Losses: General R material Marking	Losses: Detail as indicated No marking

A Division of Spang & Company

Specification for:

0R-41205-EC

110 Delta Drive
Pittsburgh, PA 15238
Phone: 412/696-1333
Fax: 412/696-0333
Email:magnetics@spang.com

DIMENSIONS

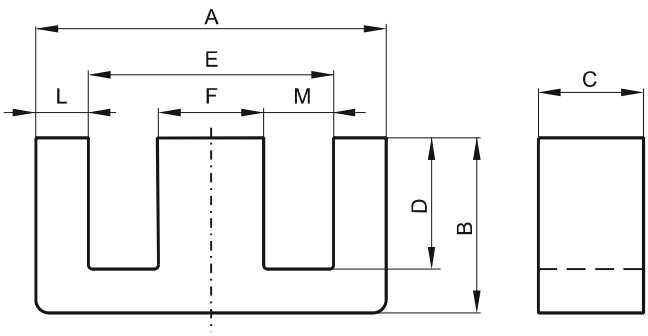

(mm)	Nominal:	Tol. min.:	Tol. max.:
A	12.7	-0.25	+ 0.25
B	5.69	-0.18	+ 0.18
C	6.4	-0.15	+ 0.15
D	3.96 Min.		
E	9.2 Min.		
F	3.2	-0.13	+ 0.13
L	1.57 Ref.		
M	3.05 Min.		
Eff. Parameters			
Ae mm ^{2}	**Amin mm ^{2}**	**le mm**	**Ve mm ^{3}**
20.2	20.0	27.7	558

INDUCTANCE

AL value (nH)	Test conditions
Nom: 1467 Min.: 1100	10 kHz, < 0.5 mT, 25 ℃

MARKING

No marking

CORE LOSSES

P_l max	Test conditions
86 mW/cm³ (0.048 W/set)	100 kHz, 100 mT, 100 ℃
591 mW/cm³ (0.33 W/set)	100 kHz, 200 mT, 100 ℃

NOTE

Spec. modifications	Previous	Revised
2005-06-22	C=6.35±0.12 M=3.18±0.13 Losses: General R material	C=6.4±0.15 M=3.05 Min. Losses: Detail as indicated

A Division of Spang & Company

Specification for:

0J-41205-EC

110 Delta Drive
Pittsburgh, PA 15238
Phone: 412/696-1333
Fax: 412/696-0333
Email:magnetics@spang.com

DIMENSIONS

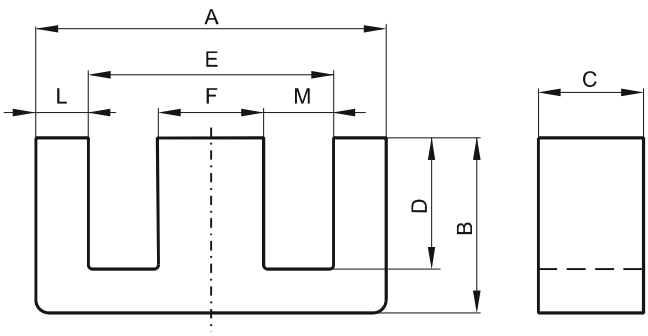

(mm)	Nominal:	Tol. min.:	Tol. max.:
A	12.7	-0.25	+ 0.25
B	5.69	-0.18	+ 0.18
C	6.4	-0.15	+ 0.15
D	3.96 Min.		
E	9.2 Min.		
F	3.2	-0.13	+ 0.13
L	1.57 Ref.		
M	3.05 Min.		
Eff. Parameters			
Ae mm ^{2}	**Amin mm ^{2}**	**le mm**	**Ve mm ^{3}**
20.2	20.0	27.7	558

INDUCTANCE

AL value (nH)	Test conditions
Nom: 3300 Min.: 2475	10 kHz, < 0.5 mT, 25 ℃

MARKING

No marking

LOSS FACTOR

tan δ/μ (x10^{-6})	Test conditions
< 15	100 kHz, < 0.25 mT, 25 ℃

NOTE

Spec. modifications	Previous	Revised
2005-06-22	C=6.35±0.12 M=3.18±0.13 Loss factor: General J material	C=6.4±0.15 M=3.05 Min. Loss factor: Detail as indicated

A Division of Spang & Company

Specification for:

0P-41205-EC

110 Delta Drive
Pittsburgh, PA 15238
Phone: 412/696-1333
Fax: 412/696-0333
Email:magnetics@spang.com

DIMENSIONS

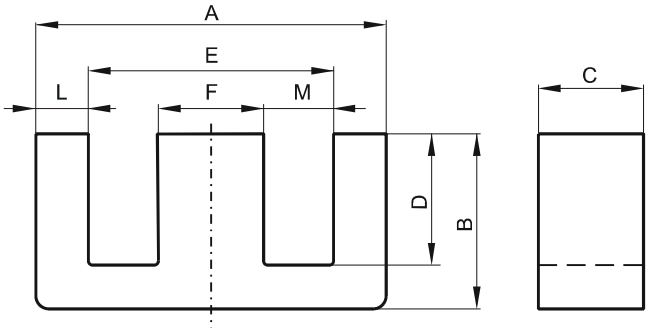

(mm)	Nominal:	Tol. min.:	Tol. max.:
A	12.7	-0.25	+ 0.25
B	5.69	-0.18	+ 0.18
C	6.4	-0.15	+ 0.15
D	3.96 Min.		
E	9.2 Min.		
F	3.2	-0.13	+ 0.13
L	1.57 Ref.		
M	3.05 Min.		
Eff. Parameters			
Ae mm ^{2}	**Amin mm ^{2}**	**le mm**	**Ve mm ^{3}**
20.2	20.0	27.7	558

INDUCTANCE

AL value (nH)	Test conditions
Nom: 1600 Min.: 1200	10 kHz, < 0.5 mT, 25 ℃

MARKING

No marking

CORE LOSSES

P_l max	Test conditions
108 mW/cm³ (0.06 W/set)	100 kHz, 100 mT, 100 ℃

NOTE

Spec. modifications	Previous	Revised
2005-06-22	C=6.35±0.12 M=3.18±0.13 Losses: General P material	C=6.4±0.15 M=3.05 Min. Losses: Detail as indicated

A Division of Spang & Company

Specification for:

0F-41308-EC

110 Delta Drive
Pittsburgh, PA 15238
Phone: 412/696-1333
Fax: 412/696-0333
Email:magnetics@spang.com

DIMENSIONS

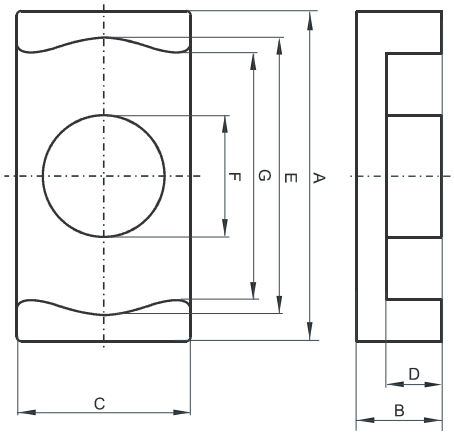

(mm)	Nominal:	Tol. min.:	Tol. max.:
A	12.8	-0.3	+ 0.3
B	2.85	-0.08	+ 0.08
C	8.7	-0.25	+ 0.25
D	1.75	-0.13	+ 0.13
E	11.2	-0.3	+ 0.3
F	5.0	-0.15	+ 0.15
G	9.05	-0.3	+ 0.3
Eff. Parameters			
Ae mm ^{2}	**Amin mm ^{2}**	**le mm**	**Ve mm ^{3}**
19.9	19.2	17.5	348

INDUCTANCE

AL value (nH)	Test conditions
Nom: 1950 : 25%	10 kHz, < 0.5 mT, 25 ℃

MARKING

F
EC

CORE LOSSES

P_l max	Test conditions
201 mW/cm³ (0.07 W/set)	25 kHz, 200 mT, 100 ℃

A Division of Spang & Company

Specification for:

0P-41308-IC

110 Delta Drive
Pittsburgh, PA 15238
Phone: 412/696-1333
Fax: 412/696-0333
Email:magnetics@spang.com

DIMENSIONS

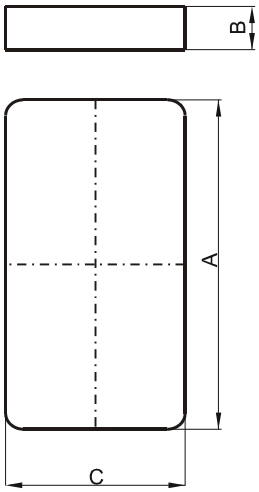

(mm)	Nominal:	Tol. min.:	Tol. max.:
A	12.8	-0.3	+ 0.3
B	1.1	-0.1	+ 0.1
C	8.7	-0.25	+ 0.25
Eff. Parameters (with 0_41308EC)			
Ae mm ^{2}	**Amin mm ^{2}**	**le mm**	**Ve mm ^{3}**
19.8	19.2	15.9	315

INDUCTANCE

AL value (nH)	Test conditions (with 0P41308EC)
Nom: 1900 Min.: 1425	10 kHz, < 0.5 mT, 25 ℃

MARKING

P IC

CORE LOSSES

P_l max	Test conditions
111 mW/cm³ (0.035 W/set)	100 kHz, 100 mT, 100 ℃

A Division of Spang & Company

Specification for:

0R-41308-IC

110 Delta Drive
Pittsburgh, PA 15238
Phone: 412/696-1333
Fax: 412/696-0333
Email:magnetics@spang.com

DIMENSIONS

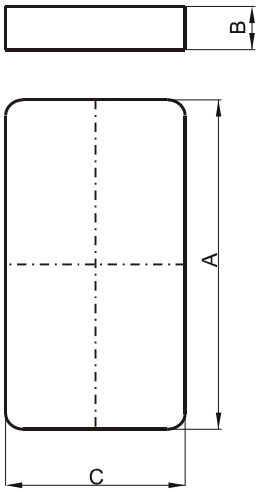

(mm)	Nominal:	Tol. min.:	Tol. max.:
A	12.8	-0.3	+ 0.3
B	1.1	-0.1	+ 0.1
C	8.7	-0.25	+ 0.25
Eff. Parameters (with 0_41308EC)			
Ae mm ^{2}	**Amin mm ^{2}**	**le mm**	**Ve mm ^{3}**
19.8	19.2	15.9	315

INDUCTANCE

AL value (nH)	Test conditions (with 0R41308EC)
Nom: 1800 Min.: 1350	10 kHz, < 0.5 mT, 25 ℃

MARKING

R IC

CORE LOSSES

P_l max	Test conditions
98 mW/cm³ (0.031 W/set)	100 kHz, 100 mT, 100 ℃
667 mW/cm³ (0.21 W/set)	100 kHz, 200 mT, 100 ℃

A Division of Spang & Company

Specification for:

0F-41308-IC

110 Delta Drive
Pittsburgh, PA 15238
Phone: 412/696-1333
Fax: 412/696-0333
Email:magnetics@spang.com

DIMENSIONS

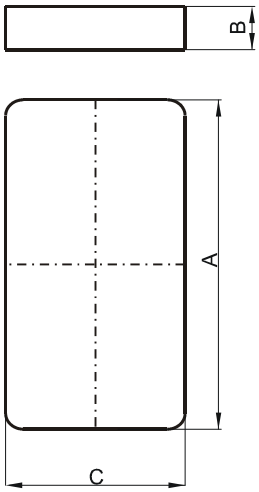

(mm)	Nominal:	Tol. min.:	Tol. max.:
A	12.8	-0.3	+ 0.3
B	1.1	-0.1	+ 0.1
C	8.7	-0.25	+ 0.25
Eff. Parameters (with 0_41308EC)			
Ae mm ^{2}	**Amin mm ^{2}**	**le mm**	**Ve mm ^{3}**
19.8	19.2	15.9	315

INDUCTANCE

AL value (nH)	Test conditions (with 0F41308EC)
2000 ± 25%	10 kHz, < 0.5 mT, 25 ℃

MARKING

F
IC

CORE LOSSES

P_l max	Test conditions
210 mW/cm³ (0.066 W/set)	25 kHz, 200 mT, 100 ℃

A Division of Spang & Company

Specification for:

0W-41408-UG

110 Delta Drive
Pittsburgh, PA 15238
Phone: 412/696-1333
Fax: 412/696-0333
Email:magnetics@spang.com

DIMENSIONS

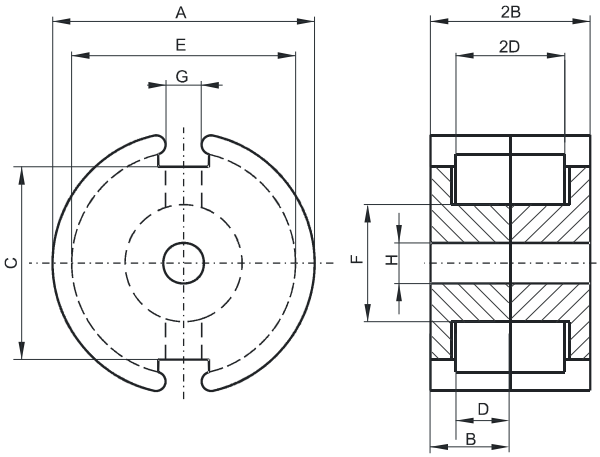

(mm)	Nominal:	Tol. min.:	Tol. max.:
A	14.3	-0.5	0.0
B	4.2	-0.05	+ 0.05
2B	8.4	-0.1	+ 0.1
C	9.5	-0.3	+ 0.3
D	2.8	0.0	+ 0.2
2D	5.6	0.0	+ 0.4
E	11.6	0.0	+ 0.4
F	6.0	-0.2	0.0
G	2.7	0.0	+ 1.2
H	3.0	0.0	+ 0.1
Eff. Parameters			
Ae mm ^{2}	**Amin mm ^{2}**	**le mm**	**Ve mm ^{3}**
25.1	19.8	19.8	495

INDUCTANCE

AL value (nH)	Test conditions
Nom: 8400 Min.: 6300	10 kHz, < 0.5 mT, 25 ℃

MARKING

No marking

LOSS FACTOR

tan δ/μ (x10^{-6})	Test conditions
< 3	10 kHz, < 0.25 mT, 25 ℃
< 45	100 kHz, < 0.25 mT, 25 ℃

NOTE

Spec. modifications	Previous	Revised
2005-06-22	H=3.1±0.08 Loss factor: General W material Marking	H=3.0 Min. H=3.1 Max. Loss factor: Detail as indicated No marking

A Division of Spang & Company

Specification for:

0R-41425-EC

110 Delta Drive
Pittsburgh, PA 15238
Phone: 412/696-1333
Fax: 412/696-0333
Email:magnetics@spang.com

DIMENSIONS

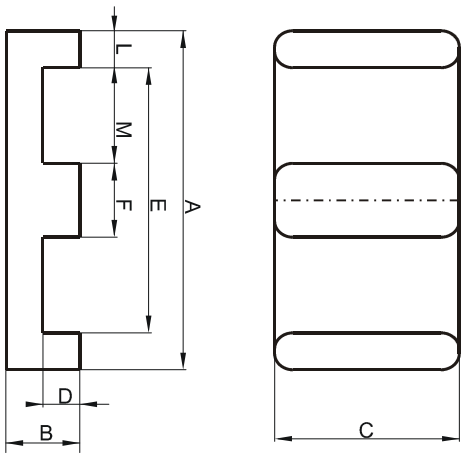

(mm)	Nominal:	Tol. min.:	Tol. max.:
A	14.0	-0.3	+ 0.3
B	2.5	-0.1	+ 0.1
C	5.0	-0.1	+ 0.1
D	1.0	-0.1	+ 0.1
E	11.0	-0.25	+ 0.25
F	3.0	-0.1	+ 0.1
L	1.5 Ref.		
M	4.0 Ref.		
Eff. Parameters			
Ae mm ^{2}	**Amin mm ^{2}**	**le mm**	**Ve mm ^{3}**
14.7	14.7	16.7	244

INDUCTANCE

AL value (nH)	Test conditions
Nom: 1519 Min.: 1139	10 kHz, < 0.5 mT, 25 ℃

MARKING

No marking

CORE LOSSES

P_l max	Test conditions
86 mW/cm³ (0.021 W/set)	100 kHz, 100 mT, 100 ℃
615 mW/cm³ (O.15 W/set)	100 kHz, 200 mT, 100 ℃

NOTE

Spec. modifications	Previous	Revised
2005-06-16	Al=1240 Min. Al=1653 Nom. Losses: General R material	Al=1139 Min. Al=1519 Nom. Losses: Detail as indicated

A Division of Spang & Company

Specification for:

0F-41425-EC

110 Delta Drive
Pittsburgh, PA 15238
Phone: 412/696-1333
Fax: 412/696-0333
Email:magnetics@spang.com

DIMENSIONS

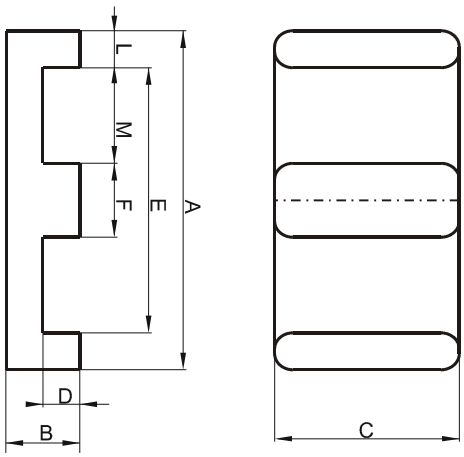

(mm)	Nominal:	Tol. min.:	Tol. max.:
A	14.0	-0.3	+ 0.3
B	2.5	-0.1	+ 0.1
C	5.0	-0.1	+ 0.1
D	1.0	-0.1	+ 0.1
E	11.0	-0.25	+ 0.25
F	3.0	-0.1	+ 0.1
L	1.5 Ref.		
M	4.0 Ref.		
Eff. Parameters			
Ae mm ^{2}	**Amin mm ^{2}**	**le mm**	**Ve mm ^{3}**
14.7	14.7	16.7	244

INDUCTANCE

AL value (nH)	Test conditions
1765 ± 25%	10 kHz, < 0.5 mT, 25 ℃

MARKING

No marking

CORE LOSSES

P_l max	Test conditions
205 mW/cm³ (0.05 W/set)	25 kHz, 200 mT, 100 ℃

NOTE

Spec. modifications	Previous	Revised
2005-06-22	Al=2150±25% Losses: General F material	Al=1765±25% Losses: Detail as indicated

A Division of Spang & Company

Specification for:

0F-41426-EC

110 Delta Drive
Pittsburgh, PA 15238
Phone: 412/696-1333
Fax: 412/696-0333
Email:magnetics@spang.com

DIMENSIONS

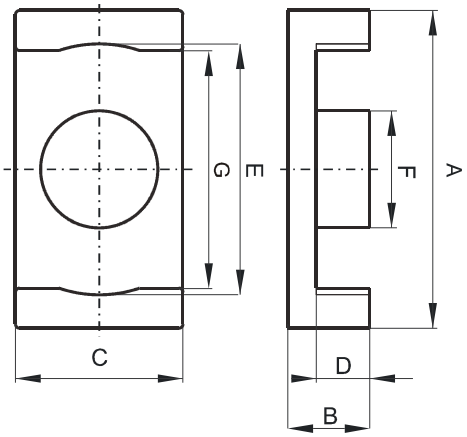

(mm)	Nominal:	Tol. min.:	Tol. max.:
A	14.7	-0.4	0.0
B	2.95	-0.05	+ 0.05
C	6.8	-0.2	0.0
D	1.55	0.0	+ 0.2
E	11.6	0.0	+ 0.4
F	4.8	-0.2	0.0
Eff. Parameters			
Ae mm ^{2}	**Amin mm ^{2}**	**le mm**	**Ve mm ^{3}**
17.6	17.3	19.0	333

INDUCTANCE

AL value (nH)	Test conditions
Nom: 1850 : 25%	10 kHz, < 0.5 mT, 25 ℃

MARKING

F
EC

CORE LOSSES

P_l max	Test conditions
210 mW/cm³ (0.07 W/set)	25 kHz, 200 mT, 100 ℃

A Division of Spang & Company

Specification for:

FF-41805-EC

110 Delta Drive
Pittsburgh, PA 15238
Phone: 412/696-1333
Fax: 412/696-0333
Email:magnetics@spang.com

DIMENSIONS

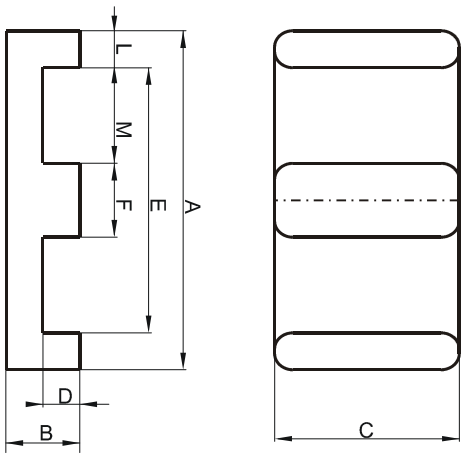

(mm)	Nominal:	Tol. min.:	Tol. max.:
A	18.0	-0.35	+ 0.35
B	4.0	-0.1	+ 0.1
C	10.0	-0.2	+ 0.2
D	2.0	-0.1	+ 0.1
E	13.7 Min.		
F	4.0	-0.1	+ 0.1
L	2.0 Ref.		
M	5.0 Ref.		
Eff. Parameters			
Ae mm ^{2}	**Amin mm ^{2}**	**le mm**	**Ve mm ^{3}**
40.1	39.9	24.2	972

INDUCTANCE

AL value (nH)	Test conditions
3853 ± 25%	10 kHz, < 0.5 mT, 25 ℃

MARKING

F
EC

CORE LOSSES

P_l max	Test conditions
206 mW/cm³ (0.20 W/set)	25 kHz, 200 mT, 100 ℃

NOTE

Spec. modifications	Previous	Revised
2005-06-22	AL=4380±25% Losses: General F material	AL=3853±25% Losses: Detail as indicated

A Division of Spang & Company

Specification for:

FF-41805-IC

110 Delta Drive
Pittsburgh, PA 15238
Phone: 412/696-1333
Fax: 412/696-0333
Email:magnetics@spang.com

DIMENSIONS

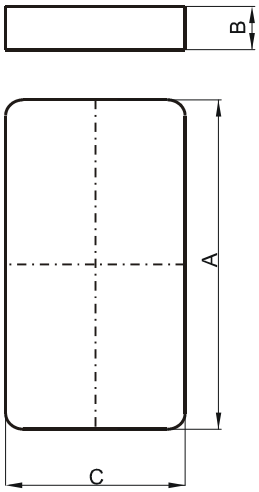

(mm)	Nominal:	Tol. min.:	Tol. max.:
A	18.0	-0.41	+ 0.41
B	2.39	-0.1	+ 0.1
C	10.0	-0.2	+ 0.2
Eff. Parameters (with F_41805EC)			
Ae mm ^{2}	**Amin mm ^{2}**	**le mm**	**Ve mm ^{3}**
40.1	39.9	20.3	813

INDUCTANCE

AL value (nH)	Test conditions (with FF41805EC)
4278 ± 25%	10 kHz, < 0.5 mT, 25 ℃

MARKING

F
IC

CORE LOSSES

P_l max	Test conditions
209 mW/cm³ (0.17 W/set)	25 kHz, 200 mT, 100 ℃

NOTE

Spec. modifications	Previous	Revised
2005-06-22	AL=5210±25% Losses: General F material	AL=4278±25% Losses: Detail as indicated

A Division of Spang & Company

Specification for:

FP-41805-IC

110 Delta Drive
Pittsburgh, PA 15238
Phone: 412/696-1333
Fax: 412/696-0333
Email:magnetics@spang.com

DIMENSIONS

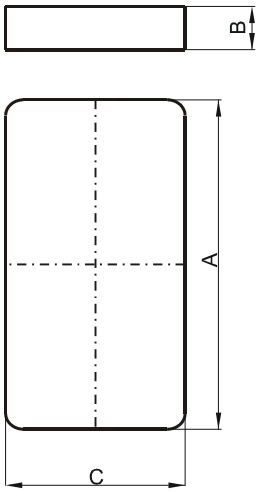

(mm)	Nominal:	Tol. min.:	Tol. max.:
A	18.0	-0.41	+ 0.41
B	2.39	-0.1	+ 0.1
C	10.0	-0.2	+ 0.2
Eff. Parameters (with F_41805EC)			
Ae mm ^{2}	**Amin mm ^{2}**	**le mm**	**Ve mm ^{3}**
40.1	39.9	20.3	813

INDUCTANCE

AL value (nH)	Test conditions (with FP41805EC)
Nom: 3837 Min.: 2878	10 kHz, < 0.5 mT, 25 ℃

MARKING

P
IC

CORE LOSSES

P_l max	Test conditions
117 mW/cm³ (0.095 W/set)	100 kHz, 100 mT, 100 ℃

NOTE

Spec. modifications	Previous	Revised
2005-06-22	Losses: General P material	Losses: Detail as indicated

A Division of Spang & Company

Specification for:

0F-41814-UG

110 Delta Drive
Pittsburgh, PA 15238
Phone: 412/696-1333
Fax: 412/696-0333
Email:magnetics@spang.com

DIMENSIONS

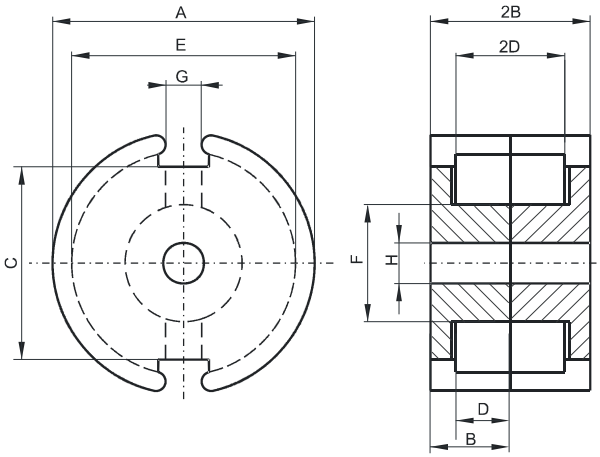

(mm)	Nominal:	Tol. min.:	Tol. max.:
A	18.0	-0.4	+ 0.4
B	7.1	-0.2	+ 0.2
2B	14.2	-0.4	+ 0.4
C	11.84	-0.25	+ 0.25
D	5.05	0.0	+ 0.2
2D	10.1	0.0	+ 0.4
E	14.0	0.0	+ 0.4
F	7.4	-0.3	0.0
G	3.6	0.0	+ 0.3
H	3.1	-0.08	+ 0.08
Eff. Parameters			
Ae mm ^{2}	**Amin mm ^{2}**	**le mm**	**Ve mm ^{3}**
42.6	36.0	29.3	1248

INDUCTANCE

AL value (nH)	Test conditions
3350 ± 25%	10 kHz, < 0.5 mT, 25 ℃

MARKING

F
UG

CORE LOSSES

P_l max	Test conditions
232 mW/cm³ (0.29 W/set)	25 kHz, 200 mT, 100 ℃

NOTE

Spec. modifications	Previous	Revised
2005-06-16	B=7.1 Max. 2B=14.17 Max. Losses: General F material Marking	B=7.3 Max. 2B=14.6 Max. Losses: Detail as indicated No marking

A Division of Spang & Company

Specification for:

CF-42014-EC

110 Delta Drive
Pittsburgh, PA 15238
Phone: 412/696-1333
Fax: 412/696-0333
Email:magnetics@spang.com

DIMENSIONS

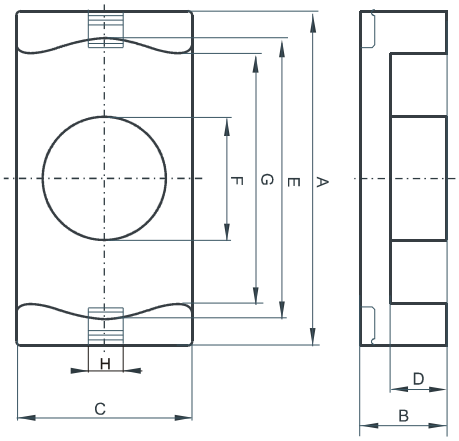

(mm)	Nominal:	Tol. min.:	Tol. max.:
A	20.0	-0.35	+ 0.35
B	6.8	-0.1	+ 0.1
C	14.0	-0.3	+ 0.3
D	4.6	-0.15	+ 0.15
E	18.0	-0.35	+ 0.35
F	8.8	-0.15	+ 0.15
G	12.86	-0.35	+ 0.35
H	5.8	-0.15	+ 0.15
Eff. Parameters			
Ae mm ^{2}	**Amin mm ^{2}**	**le mm**	**Ve mm ^{3}**
59.0	55.0	33.2	1960

INDUCTANCE

AL value (nH)	Test conditions
4575 ± 25%	10 kHz, < 0.5 mT, 25 ℃

MARKING

F
EC

CORE LOSSES

P_l max	Test conditions
204 mW/cm³ (0.40 W/set)	25 kHz, 200 mT, 100 ℃

A Division of Spang & Company

Specification for:

CP-42014-EC

110 Delta Drive
Pittsburgh, PA 15238
Phone: 412/696-1333
Fax: 412/696-0333
Email:magnetics@spang.com

DIMENSIONS

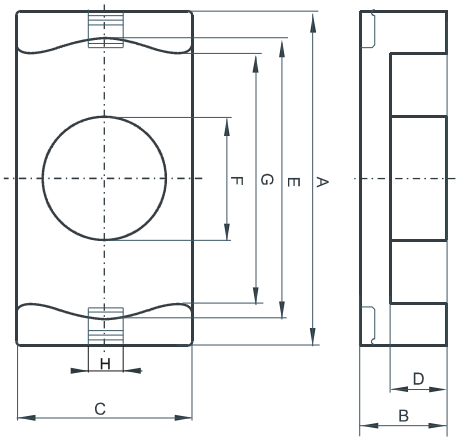

(mm)	Nominal:	Tol. min.:	Tol. max.:
A	20.0	-0.35	+ 0.35
B	6.8	-0.1	+ 0.1
C	14.0	-0.3	+ 0.3
D	4.6	-0.15	+ 0.15
E	18.0	-0.35	+ 0.35
F	8.8	-0.15	+ 0.15
G	12.86	-0.35	+ 0.35
H	5.8	-0.15	+ 0.15
Eff. Parameters			
Ae mm ^{2}	**Amin mm ^{2}**	**le mm**	**Ve mm ^{3}**
59.0	55.0	33.2	1960

INDUCTANCE

AL value (nH)	Test conditions
Nom: 4026 Min.: 3019	10 kHz, < 0.5 mT, 25 ℃

MARKING

P
EC

CORE LOSSES

P_l max	Test conditions
112 mW/cm³ (0.22 W/set)	100 kHz, 100 mT, 100 ℃

A Division of Spang & Company

Specification for:

CR-42014-EC

110 Delta Drive
Pittsburgh, PA 15238
Phone: 412/696-1333
Fax: 412/696-0333
Email:magnetics@spang.com

DIMENSIONS

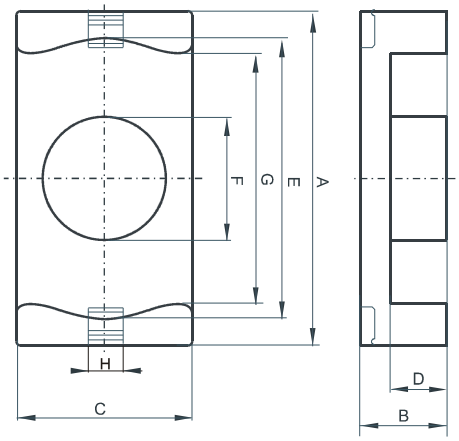

(mm)	Nominal:	Tol. min.:	Tol. max.:
A	20.0	-0.35	+ 0.35
B	6.8	-0.1	+ 0.1
C	14.0	-0.3	+ 0.3
D	4.6	-0.15	+ 0.15
E	18.0	-0.35	+ 0.35
F	8.8	-0.15	+ 0.15
G	12.86	-0.35	+ 0.35
H	5.8	-0.15	+ 0.15
Eff. Parameters			
Ae mm ^{2}	**Amin mm ^{2}**	**le mm**	**Ve mm ^{3}**
59.0	55.0	33.2	1960

INDUCTANCE

AL value (nH)	Test conditions
Nom: 3788 Min.: 2841	10 kHz, < 0.5 mT, 25 ℃

MARKING

R EC

CORE LOSSES

P_l max	Test conditions
87 mW/cm³ (0.17 W/set)	100 kHz, 100 mT, 100 ℃
612 mW/cm³ (1.2 W/set)	100 kHz, 200 mT, 100 ℃

A Division of Spang & Company

Specification for:

CP-42014-IC

110 Delta Drive
Pittsburgh, PA 15238
Phone: 412/696-1333
Fax: 412/696-0333
Email:magnetics@spang.com

DIMENSIONS

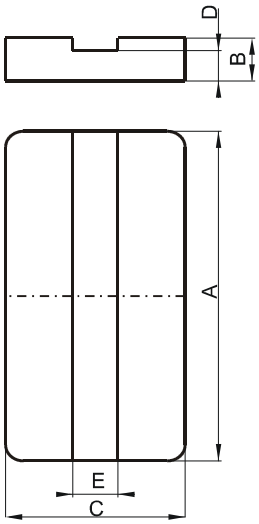

(mm)	Nominal:	Tol. min.:	Tol. max.:
A	20.0	-0.35	+ 0.35
B	2.3	-0.05	+ 0.05
C	14.0	-0.3	+ 0.3
D	1.9	-0.1	+ 0.1
Eff. Parameters (with C_42014EC)			
Ae mm ^{2}	**Amin mm ^{2}**	**le mm**	**Ve mm ^{3}**
59.8	55.0	25.1	1500

INDUCTANCE

AL value (nH)	Test conditions (with CP42014EC)
Nom: 4900 Min.: 3675	10 kHz, < 0.5 mT, 25 ℃

MARKING

P
IC

CORE LOSSES

P_l max	Test conditions
110 mW/cm³ (0.165 W/set)	100 kHz, 100 mT, 100 ℃

A Division of Spang & Company

Specification for:

CF-42014-IC

110 Delta Drive
Pittsburgh, PA 15238
Phone: 412/696-1333
Fax: 412/696-0333
Email:magnetics@spang.com

DIMENSIONS

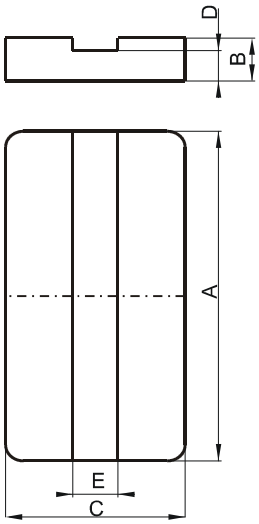

(mm)	Nominal:	Tol. min.:	Tol. max.:
A	20.0	-0.35	+ 0.35
B	2.3	-0.05	+ 0.05
C	14.0	-0.3	+ 0.3
D	1.9	-0.1	+ 0.1
Eff. Parameters (with C_42014EC)			
Ae mm ^{2}	**Amin mm ^{2}**	**le mm**	**Ve mm ^{3}**
59.8	55.0	25.1	1500

INDUCTANCE

AL value (nH)	Test conditions (with CF42014EC)
5500 ± 25%	10 kHz, < 0.5 mT, 25 ℃

MARKING

F
IC

CORE LOSSES

P_l max	Test conditions
212 mW/cm³ (0.318 W/set)	25 kHz, 200 mT, 100 ℃

A Division of Spang & Company

Specification for:

CR-42014-IC

110 Delta Drive
Pittsburgh, PA 15238
Phone: 412/696-1333
Fax: 412/696-0333
Email:magnetics@spang.com

DIMENSIONS

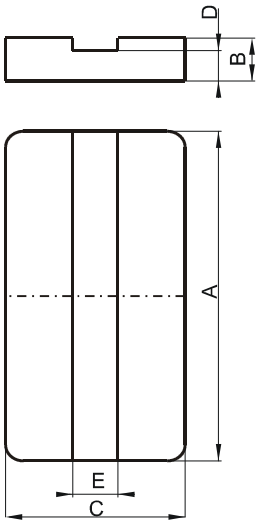

(mm)	Nominal:	Tol. min.:	Tol. max.:
A	20.0	-0.35	+ 0.35
B	2.3	-0.05	+ 0.05
C	14.0	-0.3	+ 0.3
D	1.9	-0.1	+ 0.1
Eff. Parameters (with C_42014EC)			
Ae mm ^{2}	**Amin mm ^{2}**	**le mm**	**Ve mm ^{3}**
59.8	55.0	25.1	1500

INDUCTANCE

AL value (nH)	Test conditions (with CR42014EC)
Nom: 4500 Min.: 3375	10 kHz, < 0.5 mT, 25 ℃

MARKING

R
IC

CORE LOSSES

P_l max	Test conditions
89 mW/cm³ (0.134 W/set)	100 kHz, 100 mT, 100 ℃
616 mW/cm³ (0.92 W/set)	100 kHz, 200 mT, 100 ℃

MAGNETICS®
A Division of Spang & Company

Specification for:

0F-42016-UG

110 Delta Drive
Pittsburgh, PA 15238
Phone: 412/696-1333
Fax: 412/696-0333
Email:magnetics@spang.com

DIMENSIONS

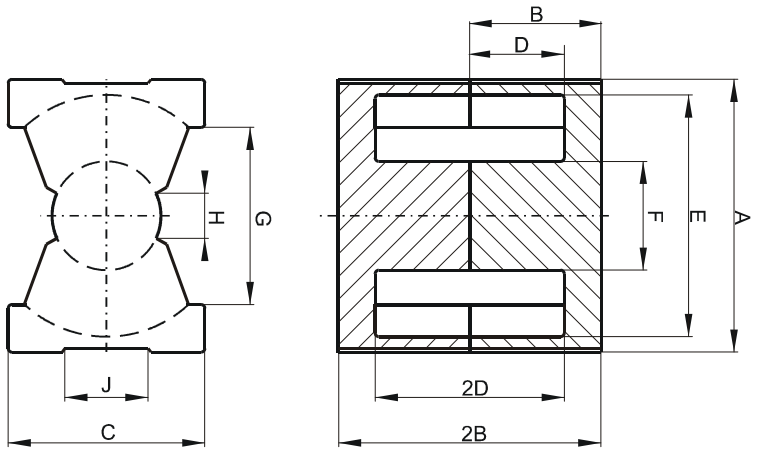

(mm)	Nominal:	Tol. min.:	Tol. max.:
A	21.3	-0.4	+ 0.4
B	8.1	-0.1	+ 0.1
2B	16.2	-0.2	+ 0.2
C	14.0	-0.4	+ 0.4
D	5.15	-0.15	+ 0.15
2D	10.3	-0.3	+ 0.3
E	18.0	-0.4	+ 0.4
F	8.8	-0.2	+ 0.2
G	12.0 Min.		
H	4.0 Min.		
J	8.13		
Eff. Parameters			
Ae mm ^{2}	**Amin mm ^{2}**	**le mm**	**Ve mm ^{3}**
61.9	59.1	37.6	2330

INDUCTANCE

AL value (nH)	Test conditions
4690 ± 25%	10 kHz, < 0.5 mT, 25 ℃

MARKING

0F42016UG
PXXXXX

CORE LOSSES

P_l max	Test conditions
232 mW/cm³ (0.54 W/set)	25 kHz, 200 mT, 100 ℃

NOTE

Spec. modifications	Previous	Revised
2005-06-22	A=21.67 Max. Losses: General F material	A=21.7 Max. Losses: Detail as indicated

A Division of Spang & Company

Specification for:

0R-42107-EC

110 Delta Drive
Pittsburgh, PA 15238
Phone: 412/696-1333
Fax: 412/696-0333
Email:magnetics@spang.com

DIMENSIONS

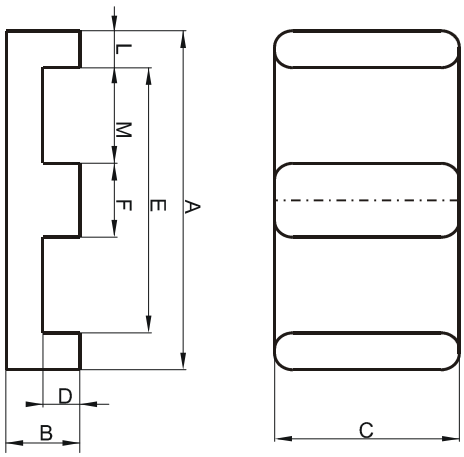

(mm)	Nominal:	Tol. min.:	Tol. max.:
A	21.8	-0.4	+ 0.4
B	3.91	-0.08	+ 0.08
C	7.8	-0.5	+ 0.5
D	1.73	-0.2	+ 0.2
E	16.8	-0.3	+ 0.3
F	5.0	-0.2	+ 0.2
L	2.5	-0.12	+ 0.12
M	5.89	-0.25	+ 0.25
Eff. Parameters			
Ae mm ^{2}	**Amin mm ^{2}**	**le mm**	**Ve mm ^{3}**
37.1	36	25.7	960

INDUCTANCE

AL value (nH)	Test conditions
Nom: 2920 Min.: 2190	10 kHz, < 0.5 mT, 25 ℃

MARKING

R
EC

CORE LOSSES

P_l max	Test conditions
87 mW/cm³ (0.08 W/set)	100 kHz, 100 mT, 100 ℃
580 mW/cm³ (0.56 W/set)	100 kHz, 200 mT, 100 ℃

NOTE

Spec. modifications	Previous	Revised
2005-06-22	B=3.84 Min. Losses: General R material	B=3.83 Min. Losses: Detail as indicated

A Division of Spang & Company

Specification for:

0F-42107-EC

110 Delta Drive
Pittsburgh, PA 15238
Phone: 412/696-1333
Fax: 412/696-0333
Email:magnetics@spang.com

DIMENSIONS

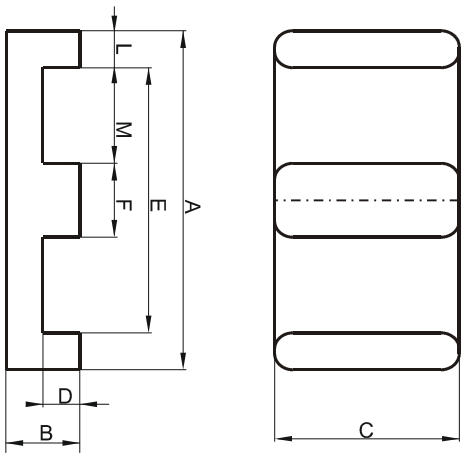

(mm)	Nominal:	Tol. min.:	Tol. max.:
A	21.8	-0.4	+ 0.4
B	3.91	-0.08	+ 0.08
C	7.8	-0.5	+ 0.5
D	1.73	-0.2	+ 0.2
E	16.8	-0.3	+ 0.3
F	5.0	-0.2	+ 0.2
L	2.5	-0.12	+ 0.12
M	5.89	-0.25	+ 0.25
Eff. Parameters			
Ae mm ^{2}	**Amin mm ^{2}**	**le mm**	**Ve mm ^{3}**
37.1	36	25.7	960

INDUCTANCE

AL value (nH)	Test conditions
3810 ± 25%	10 kHz, < 0.5 mT, 25 ℃

MARKING

F
EC

CORE LOSSES

P_l max	Test conditions
208 mW/cm³ (0.20 W/set)	25 kHz, 200 mT, 100 ℃

NOTE

Spec. modifications	Previous	Revised
2005-06-22	AL=4271±25% B=3.84 Min. Losses: General F material	AL=3810±25% B=3.83 Min. Losses: Detail as indicated

A Division of Spang & Company

Specification for:

0J-42213-UG

110 Delta Drive
Pittsburgh, PA 15238
Phone: 412/696-1333
Fax: 412/696-0333
Email:magnetics@spang.com

DIMENSIONS

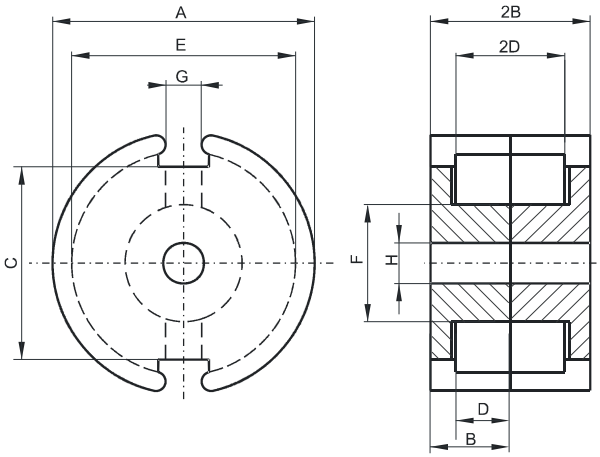

(mm)	Nominal:	Tol. min.:	Tol. max.:
A	22.0	-0.8	0.0
B	6.7	-0.1	+ 0.1
2B	13.4	-0.2	+ 0.2
C	15.0	-0.4	+ 0.4
D	4.6	0.0	+ 0.2
2D	9.2	0.0	+ 0.4
E	17.9	0.0	+ 0.6
F	9.4	-0.3	0.0
G	3.8	-0.6	+ 0.6
H	4.4	0.0	+ 0.3
Eff. Parameters			
Ae mm ^{2}	**Amin mm ^{2}**	**le mm**	**Ve mm ^{3}**
63.4	50.9	31.5	2000

INDUCTANCE

AL value (nH)	Test conditions
Nom: 9100 Min.: 6825	10 kHz, < 0.5 mT, 25 ℃

MARKING

No marking

LOSS FACTOR

tan δ/μ (x10^{-6})	Test conditions
< 20	100 kHz, < 0.25 mT, 25 ℃

NOTE

Spec. modifications	Previous	Revised
2005-06-22	A=21.22 Min. G=3.1 Nom. G=2.99 Min. H=4.55±0.1 Loss factor: General J material Marking	A=21.2 Min. G=3.8±0.6 H=4.4 Min. H=4.7 Max. Loss factor: Detail as indicated No marking

A Division of Spang & Company

Specification for:

0F-42213-UG

110 Delta Drive
Pittsburgh, PA 15238
Phone: 412/696-1333
Fax: 412/696-0333
Email:magnetics@spang.com

DIMENSIONS

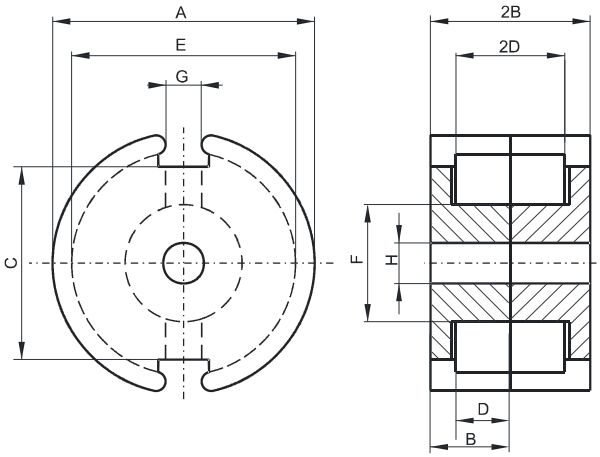

(mm)	Nominal:	Tol. min.:	Tol. max.:
A	22.0	-0.8	0.0
B	6.7	-0.1	+ 0.1
2B	13.4	-0.2	+ 0.2
C	15.0	-0.4	+ 0.4
D	4.6	0.0	+ 0.2
2D	9.2	0.0	+ 0.4
E	17.9	0.0	+ 0.6
F	9.4	-0.3	0.0
G	3.8	-0.6	+ 0.6
H	4.4	0.0	+ 0.3
Eff. Parameters			
Ae mm ^{2}	**Amin mm ^{2}**	**le mm**	**Ve mm ^{3}**
63.4	50.9	31.5	2000

INDUCTANCE

AL value (nH)	Test conditions
4900 ± 25%	10 kHz, < 0.5 mT, 25 ℃

MARKING

F
UG

CORE LOSSES

P_l max	Test conditions
230 mW/cm³ (0.46 W/set)	25 kHz, 200 mT, 100 ℃

NOTE

Spec. modifications	Previous	Revised
2005-06-22	A=21.22 Min. G=3.1 Nom. G=2.99 Min. H=4.55±0.1 Losses: General F material	A=21.2 Min. G=3.8±0.6 H=4.4 Min. H=4.7 Max. Losses: Detail as indicated

A Division of Spang & Company

Specification for:

0W-42213-UG

110 Delta Drive
Pittsburgh, PA 15238
Phone: 412/696-1333
Fax: 412/696-0333
Email:magnetics@spang.com

DIMENSIONS

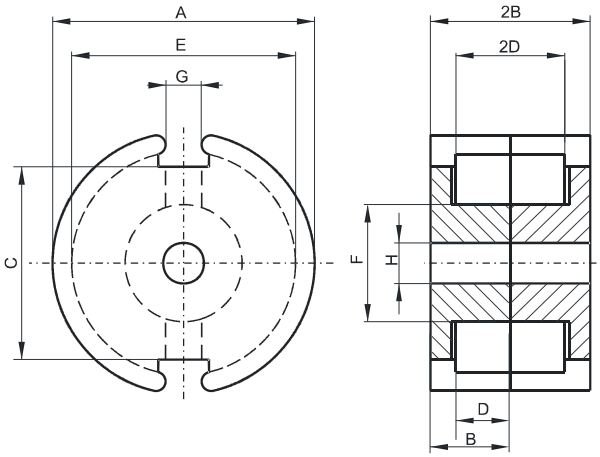

(mm)	Nominal:	Tol. min.:	Tol. max.:
A	22.0	-0.8	0.0
B	6.7	-0.1	+ 0.1
2B	13.4	-0.2	+ 0.2
C	15.0	-0.4	+ 0.4
D	4.6	0.0	+ 0.2
2D	9.2	0.0	+ 0.4
E	17.9	0.0	+ 0.6
F	9.4	-0.3	0.0
G	3.8	-0.6	+ 0.6
H	4.4	0.0	+ 0.3
Eff. Parameters			
Ae mm ^{2}	**Amin mm ^{2}**	**le mm**	**Ve mm ^{3}**
63.4	50.9	31.5	2000

INDUCTANCE

AL value (nH)	Test conditions
Nom: 16000 Min.: 11200	10 kHz, < 0.5 mT, 25 ℃

MARKING

No marking

LOSS FACTOR

tan δ/μ (x10^{-6})	Test conditions
< 3.5	10 kHz, < 0.25 mT, 25 ℃
< 50	100 kHz, < 0.25 mT, 25 ℃

NOTE

Spec. modifications	Previous	Revised
2005-06-22	A=21.22 Min. G=3.1 Nom. G=2.99 Min. H=4.55±0.1 Loss factor: General W material Marking	A=21.2 Min. G=3.8±0.6 H=4.4 Min. H=4.7 Max. Loss factor: Detail as indicated No Marking

A Division of Spang & Company

Specification for:

0P-42213-UG

110 Delta Drive
Pittsburgh, PA 15238
Phone: 412/696-1333
Fax: 412/696-0333
Email:magnetics@spang.com

DIMENSIONS

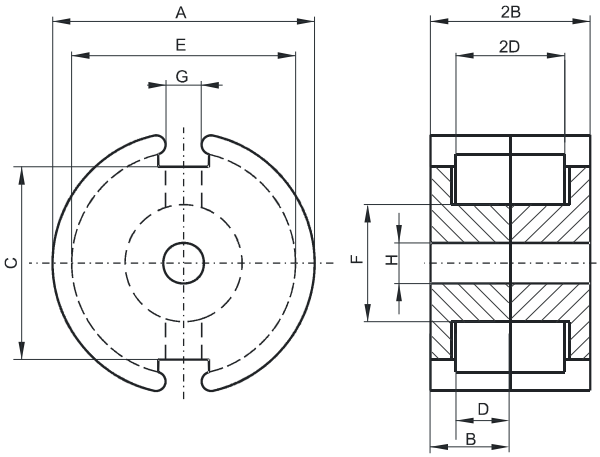

(mm)	Nominal:	Tol. min.:	Tol. max.:
A	22.0	-0.8	0.0
B	6.7	-0.1	+ 0.1
2B	13.4	-0.2	+ 0.2
C	15.0	-0.4	+ 0.4
D	4.6	0.0	+ 0.2
2D	9.2	0.0	+ 0.4
E	17.9	0.0	+ 0.6
F	9.4	-0.3	0.0
G	3.8	-0.6	+ 0.6
H	4.4	0.0	+ 0.3
Eff. Parameters			
Ae mm ^{2}	**Amin mm ^{2}**	**le mm**	**Ve mm ^{3}**
63.4	50.9	31.5	2000

INDUCTANCE

AL value (nH)	Test conditions
Nom: 4400 Min.: 3300	10 kHz, < 0.5 mT, 25 ℃

MARKING

P
UG

CORE LOSSES

P_l max	Test conditions
120 mW/cm³ (0.24 W/set)	100 kHz, 100 mT, 100 ℃

NOTE

Spec. modifications	Previous	Revised
2005-06-22	A=21.22 Min. G=3.1 Nom. G=2.99 Min. H=4.55±0.1 Losses: General P material	A=21.2 Min. G=3.8±0.6 H=4.4 Min. H=4.7 Max. Losses: Detail as indicated

A Division of Spang & Company

Specification for:

FF-42216-EC

110 Delta Drive
Pittsburgh, PA 15238
Phone: 412/696-1333
Fax: 412/696-0333
Email:magnetics@spang.com

DIMENSIONS

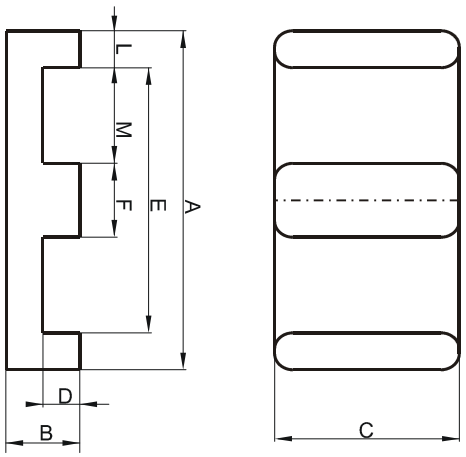

(mm)	Nominal:	Tol. min.:	Tol. max.:
A	21.8	-0.4	+ 0.4
B	5.72	-0.12	+ 0.12
C	15.8	-0.3	+ 0.3
D	3.05 Min.		
E	16.1 Min.		
F	5.08	-0.12	+ 0.12
L	2.5 Ref.		
M	5.9 Ref.		
Eff. Parameters			
Ae mm ^{2}	**Amin mm ^{2}**	**le mm**	**Ve mm ^{3}**
78.5	76.0	32.5	2550

INDUCTANCE

AL value (nH)	Test conditions
6131 ± 25%	10 kHz, < 0.5 mT, 25 ℃

MARKING

FF42216EC
PXXXXX

CORE LOSSES

P_l max	Test conditions
208 mW/cm³ (0.53 W/set)	25 kHz, 200 mT, 100 ℃

NOTE

Spec. modifications	Previous	Revised
2005-06-22	AL=6250±25% A=21.6±0.26 C=15.6 Min. L=2.54±0.13 M=5.72±0.31 Losses: General F material	AL=6131±25% A=21.8±0.4 C=15.5 Min. L=2.5 Ref. M=5.9 Ref. Losses: Detail as indicated

A Division of Spang & Company

Specification for:

FP-42216-IC

110 Delta Drive
Pittsburgh, PA 15238
Phone: 412/696-1333
Fax: 412/696-0333
Email:magnetics@spang.com

DIMENSIONS

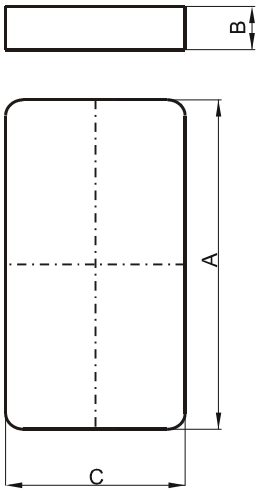

(mm)	Nominal:	Tol. min.:	Tol. max.:
A	21.8	-0.4	+ 0.4
B	2.95	-0.1	+ 0.1
C	15.8	-0.3	+ 0.3
Eff. Parameters (with F_42216EC)			
Ae mm ^{2}	**Amin mm ^{2}**	**le mm**	**Ve mm ^{3}**
80.6	80.6	25.8	2080

INDUCTANCE

AL value (nH)	Test conditions (with FP42216EC)
Nom: 6568 Min.: 4926	10 kHz, < 0.5 mT, 25 ℃

MARKING

FP42216IC
PXXXXX

CORE LOSSES

P_l max	Test conditions
111 mW/cm³ (0.23 W/set)	100 kHz, 100 mT, 100 ℃

NOTE

Spec. modifications	Previous	Revised
2005-06-22	A=21.6±0.26 C=15.62 Min. Losses: General P material	A=21.8±0.4 C=15.5 Min. Losses: Detail as indicated

A Division of Spang & Company

Specification for:

FR-42216-IC

110 Delta Drive
Pittsburgh, PA 15238
Phone: 412/696-1333
Fax: 412/696-0333
Email:magnetics@spang.com

DIMENSIONS

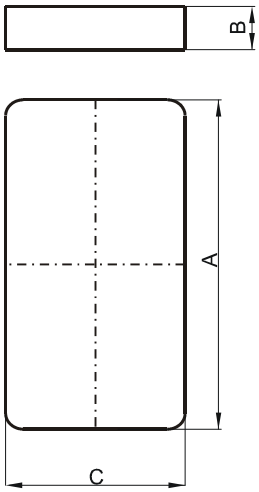

(mm)	Nominal:	Tol. min.:	Tol. max.:
A	21.8	-0.4	+ 0.4
B	2.95	-0.1	+ 0.1
C	15.8	-0.3	+ 0.3
Eff. Parameters (with F_42216EC)			
Ae mm ^{2}	**Amin mm ^{2}**	**le mm**	**Ve mm ^{3}**
80.6	80.6	25.8	2080

INDUCTANCE

AL value (nH)	Test conditions (with FR42216EC)
Nom: 6207 Min.: 4655	10 kHz, < 0.5 mT, 25 ℃

MARKING

FR42216IC
PXXXXX

CORE LOSSES

P_l max	Test conditions
87 mW/cm³ (0.18 W/set)	100 kHz, 100 mT, 100 ℃
601 mW/cm³ (1.25 W/set)	100 kHz, 200 mT, 100 ℃

NOTE

Spec. modifications	Previous	Revised
2005-06-22	A=21.6±0.26 C=15.62 Min. Losses: General R material	A=21.8±0.4 C=15.5 Min. Losses: Detail as indicated

A Division of Spang & Company

Specification for:

FF-42216-IC

110 Delta Drive
Pittsburgh, PA 15238
Phone: 412/696-1333
Fax: 412/696-0333
Email:magnetics@spang.com

DIMENSIONS

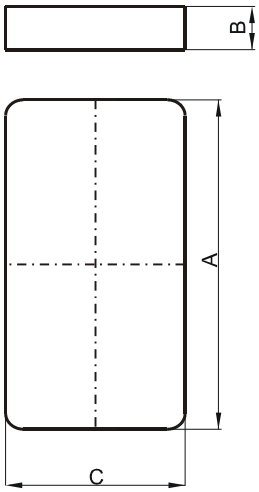

(mm)	Nominal:	Tol. min.:	Tol. max.:
A	21.8	-0.4	+ 0.4
B	2.95	-0.1	+ 0.1
C	15.8	-0.3	+ 0.3
Eff. Parameters (with F_42216EC)			
Ae mm ^{2}	**Amin mm ^{2}**	**le mm**	**Ve mm ^{3}**
80.6	80.6	25.8	2080

INDUCTANCE

AL value (nH)	Test conditions (with FF42216EC)
7392 ± 25%	10 kHz, < 0.5 mT, 25 ℃

MARKING

FF42216IC
PXXXXX

CORE LOSSES

P_l max	Test conditions
207 mW/cm³ (0.43 W/set)	25 kHz, 200 mT, 100 ℃

NOTE

Spec. modifications	Previous	Revised
2005-06-22	AL=7776±25% A=21.6±0.26 C=15.62 Min. Losses: General F material	AL=7392±25% A=21.8±0.4 C=15.5 Min. Losses: Detail as indicated

A Division of Spang & Company

Specification for:

0F-42515-IC

110 Delta Drive
Pittsburgh, PA 15238
Phone: 412/696-1333
Fax: 412/696-0333
Email:magnetics@spang.com

DIMENSIONS

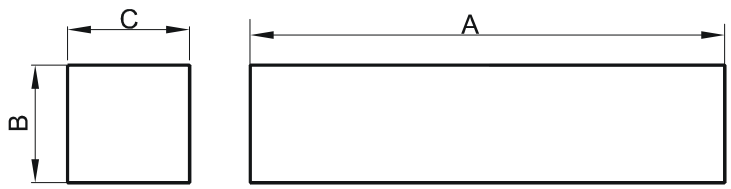

(mm)	Nominal:	Tol. min.:	Tol. max.:
A	26.4	-0.38	+ 0.38
B	3.18	-0.12	+ 0.12
C	7.37	-0.25	+ 0.25
Eff. Parameters (with 0_42515EC)			
Ae mm ^{2}	**Amin mm ^{2}**	**le mm**	**Ve mm ^{3}**
40.1	39.7	48.1	1930

INDUCTANCE

AL value (nH)	Test conditions (with 0F42515EC)
2290 ± 25%	10 kHz, < 0.5 mT, 25 ℃

MARKING

F
IC

CORE LOSSES

P_l max	Test conditions
218 mW/cm³ (0.42 W/set)	25 kHz, 200 mT, 100 ℃

NOTE

Spec. modifications	Previous	Revised
2005-06-22	A=26.04 Min. Losses: General F material	A=26.02 Min. Losses: Detail as indicated

MAGNETICS®
A Division of Spang & Company

Specification for:

0P-42515-IC

110 Delta Drive
Pittsburgh, PA 15238
Phone: 412/696-1333
Fax: 412/696-0333
Email:magnetics@spang.com

DIMENSIONS

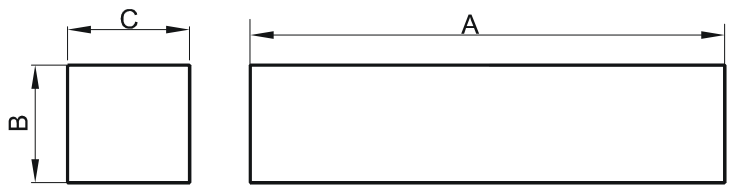

(mm)	Nominal:	Tol. min.:	Tol. max.:
A	26.4	-0.38	+ 0.38
B	3.18	-0.12	+ 0.12
C	7.37	-0.25	+ 0.25
Eff. Parameters (with 0_42515EC)			
Ae mm ^{2}	**Amin mm ^{2}**	**le mm**	**Ve mm ^{3}**
40.1	39.7	48.1	1930

INDUCTANCE

AL value (nH)	Test conditions (with 0P42515EC)
Nom: 1913 Min.: 1435	10 kHz, < 0.5 mT, 25 ℃

MARKING

P
IC

CORE LOSSES

P_l max	Test conditions
109 mW/cm³ (0.21 W/set)	100 kHz, 100 mT, 100 ℃

NOTE

Spec. modifications	Previous	Revised
2005-06-22	A=26.04 Min. Losses: General P material	A=26.02 Min. Losses: Detail as indicated

MAGNETICS®
A Division of Spang & Company

Specification for:

0R-42515-IC

110 Delta Drive
Pittsburgh, PA 15238
Phone: 412/696-1333
Fax: 412/696-0333
Email:magnetics@spang.com

DIMENSIONS

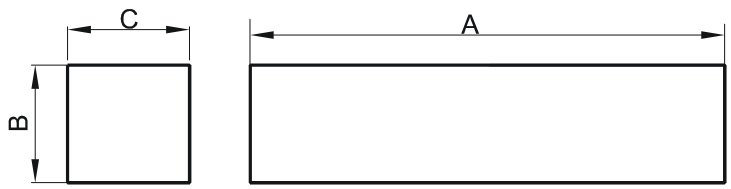

(mm)	Nominal:	Tol. min.:	Tol. max.:
A	26.4	-0.38	+ 0.38
B	3.18	-0.12	+ 0.12
C	7.37	-0.25	+ 0.25
Eff. Parameters (with 0_42515EC)			
Ae mm ^{2}	**Amin mm ^{2}**	**le mm**	**Ve mm ^{3}**
40.1	39.7	48.1	1930

INDUCTANCE

AL value (nH)	Test conditions (with 0R42515EC)
Nom: 1760 Min.: 1320	10 kHz, < 0.5 mT, 25 ℃

MARKING

R
IC

CORE LOSSES

P_l max	Test conditions
88 mW/cm³ (0.17 W/set)	100 kHz, 100 mT, 100 ℃
570 mW/cm³ (1.1 W/set)	100 kHz, 200 mT, 100 ℃

NOTE

Spec. modifications	Previous	Revised
2005-06-22	A=26.04 Min. Losses: General R material	A=26.02 Min. Losses: Detail as indicated

A Division of Spang & Company

Specification for:

0R-42516-IC

110 Delta Drive
Pittsburgh, PA 15238
Phone: 412/696-1333
Fax: 412/696-0333
Email:magnetics@spang.com

DIMENSIONS

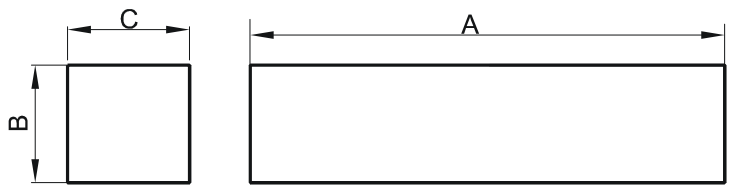

(mm)	Nominal:	Tol. min.:	Tol. max.:
A	25.4	-0.51	+ 0.64
B	6.35	-0.13	+ 0.13
C	6.35	-0.13	+ 0.13
Eff. Parameters (with 0_42515UC)			
Ae mm ^{2}	**Amin mm ^{2}**	**le mm**	**Ve mm ^{3}**
40.3	40.3	64.3	2590

INDUCTANCE

AL value (nH)	Test conditions (with 0R42516UC)
Nom: 1480 Min.: 1110	10 kHz, < 0.5 mT, 25 ℃

MARKING

No marking

CORE LOSSES

P_l max	Test conditions
88 mW/cm³ (0.23 W/set)	100 kHz, 100 mT, 100 ℃
538 mW/cm³ (1.4 W/set)	100 kHz, 200 mT, 100 ℃

NOTE

Spec. modifications	Previous	Revised
2005-06-22	A=25.91 Max. Losses: General R material	A=26.04 Max. Losses: Detail as indicated

A Division of Spang & Company

Specification for:

0P-42516-IC

110 Delta Drive
Pittsburgh, PA 15238
Phone: 412/696-1333
Fax: 412/696-0333
Email:magnetics@spang.com

DIMENSIONS

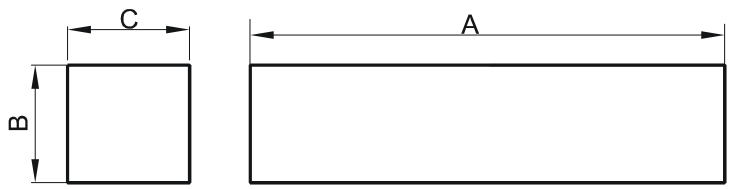

(mm)	Nominal:	Tol. min.:	Tol. max.:
A	25.4	-0.51	+ 0.64
B	6.35	-0.13	+ 0.13
C	6.35	-0.13	+ 0.13
Eff. Parameters (with 0_42515UC)			
Ae mm ^{2}	**Amin mm ^{2}**	**le mm**	**Ve mm ^{3}**
40.3	40.3	64.3	2590

INDUCTANCE

AL value (nH)	Test conditions (with 0P42516UC)
Nom: 2907 Min.: 2180	10 kHz, < 0.5 mT, 25 ℃

MARKING

No marking

CORE LOSSES

P_l max	Test conditions
112 mW/cm³ (0.29 W/set)	100 kHz, 100 mT, 100 ℃

NOTE

Spec. modifications	Previous	Revised
2005-06-22	A=25.91 Max. Losses: General P material	A=26.04 Max. Losses: Detail as indicated

A Division of Spang & Company

Specification for:

0F-42516-IC

110 Delta Drive
Pittsburgh, PA 15238
Phone: 412/696-1333
Fax: 412/696-0333
Email:magnetics@spang.com

DIMENSIONS

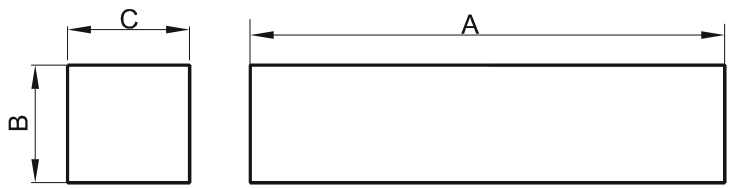

(mm)	Nominal:	Tol. min.:	Tol. max.:
A	25.4	-0.51	+ 0.64
B	6.35	-0.13	+ 0.13
C	6.35	-0.13	+ 0.13
Eff. Parameters (with 0_42515UC)			
Ae mm ^{2}	**Amin mm ^{2}**	**le mm**	**Ve mm ^{3}**
40.3	40.3	64.3	2590

INDUCTANCE

AL value (nH)	Test conditions (with 0F42516UC)
1770 ± 25%	10 kHz, < 0.5 mT, 25 ℃

MARKING

No marking

CORE LOSSES

P_l max	Test conditions
219 mW/cm³ (0.57 W/set)	25 kHz, 200 mT, 100 ℃

NOTE

Spec. modifications	Previous	Revised
2005-06-22	A=25.91 Max. Losses: General F material	A=26.04 Max. Losses: Detail as indicated

A Division of Spang & Company

Specification for:

0P-42517-IC

110 Delta Drive
Pittsburgh, PA 15238
Phone: 412/696-1333
Fax: 412/696-0333
Email:magnetics@spang.com

DIMENSIONS

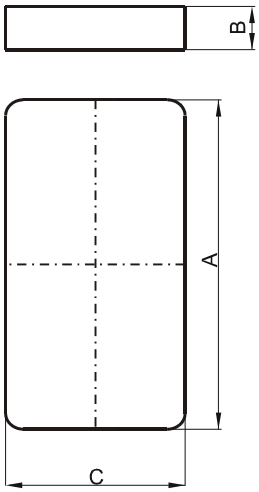

(mm)	Nominal:	Tol. min.:	Tol. max.:
A	25.0	-0.4	+ 0.4
B	2.3	-0.05	+ 0.05
C	18.0	-0.3	+ 0.3
Eff. Parameters (with 0_42517EC)			
Ae mm ^{2}	**Amin mm ^{2}**	**le mm**	**Ve mm ^{3}**
89.7	82.8	26.4	2370

INDUCTANCE

AL value (nH)	Test conditions (with 0P42517EC)
Nom: 7447 Min.: 5586	10 kHz, < 0.5 mT, 25 ℃

MARKING

0P42517IC PXXXXX

CORE LOSSES

P_l max	Test conditions
127 mW/cm³ (0.3 W/set)	100 kHz, 100 mT, 100 ℃

A Division of Spang & Company

Specification for:

0R-42517-IC

110 Delta Drive
Pittsburgh, PA 15238
Phone: 412/696-1333
Fax: 412/696-0333
Email:magnetics@spang.com

DIMENSIONS

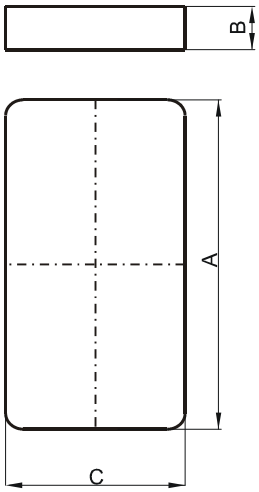

(mm)	Nominal:	Tol. min.:	Tol. max.:
A	25.0	-0.4	+ 0.4
B	2.3	-0.05	+ 0.05
C	18.0	-0.3	+ 0.3
Eff. Parameters (with 0_42517EC)			
Ae mm ^{2}	**Amin mm ^{2}**	**le mm**	**Ve mm ^{3}**
89.7	82.8	26.4	2370

INDUCTANCE

AL value (nH)	Test conditions (with 0R42517EC)
Nom: 7021 Min.: 5266	10 kHz, < 0.5 mT, 25 ℃

MARKING

0R42517IC PXXXXX

CORE LOSSES

P_l max	Test conditions
89 mW/cm³ (0.21 W/set)	100 kHz, 100 mT, 100 ℃
591 mW/cm³ (1.4 W/set)	100 kHz, 200 mT, 100 ℃

A Division of Spang & Company

Specification for:

0F-42517-IC

110 Delta Drive
Pittsburgh, PA 15238
Phone: 412/696-1333
Fax: 412/696-0333
Email:magnetics@spang.com

DIMENSIONS

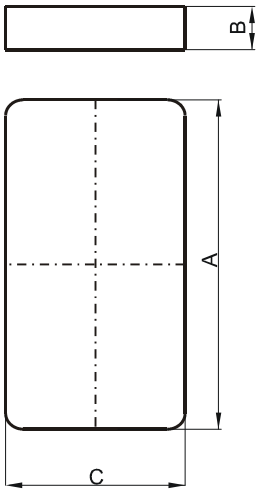

(mm)	Nominal:	Tol. min.:	Tol. max.:
A	25.0	-0.4	+ 0.4
B	2.3	-0.05	+ 0.05
C	18.0	-0.3	+ 0.3
Eff. Parameters (with 0_42517EC)			
Ae mm ^{2}	**Amin mm ^{2}**	**le mm**	**Ve mm ^{3}**
89.7	82.8	26.4	2370

INDUCTANCE

AL value (nH)	Test conditions (with 0F42517EC)
8427 ± 25%	10 kHz, < 0.5 mT, 25 ℃

MARKING

0F42517IC PXXXXX

CORE LOSSES

P_l max	Test conditions
207 mW/cm³ (0.49 W/set)	25 kHz, 200 mT, 100 ℃

A Division of Spang & Company

Specification for:

0R-42614-UG

110 Delta Drive
Pittsburgh, PA 15238
Phone: 412/696-1333
Fax: 412/696-0333
Email:magnetics@spang.com

DIMENSIONS

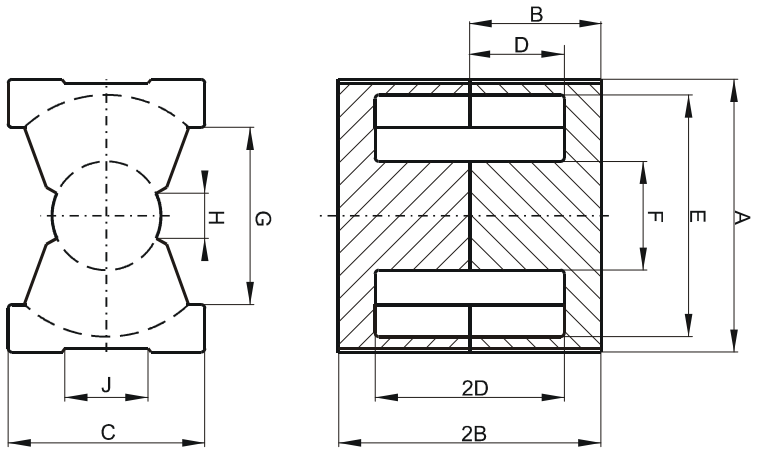

(mm)	Nominal:	Tol. min.:	Tol. max.:
A	27.2	-0.45	+ 0.45
B	5.94	-0.1	+ 0.1
2B	11.9	-0.2	+ 0.2
C	19.0	-0.45	+ 0.45
D	3.4 Min.		
2D	6.7 Min.		
E	22.05 Min.		
F	12.2 Max.		
G	15.5 Min.		
H	5.5 Min.		
J	10.0 Min.		
Eff. Parameters			
Ae mm ^{2}	**Amin mm ^{2}**	**le mm**	**Ve mm ^{3}**
86.4	70.9	33.3	2880

INDUCTANCE

AL value (nH)	Test conditions
Nom: 5613 Min.: 4210	10 kHz, < 0.5 mT, 25 ℃

MARKING

0R42614UG
PXXXXX

CORE LOSSES

P_l max	Test conditions
94 mW/cm³ (0.27 W/set)	100 kHz, 100 mT, 100 ℃
590 mW/cm³ (1.7 W/set)	100 kHz, 200 mT, 100 ℃

NOTE

Spec. modifications	Previous	Revised
2005-06-22	A=26.8 Min. Losses: General R material	A=26.75 Min. Losses: Detail as indicated

A Division of Spang & Company

Specification for:

0F-42620-UG

110 Delta Drive
Pittsburgh, PA 15238
Phone: 412/696-1333
Fax: 412/696-0333
Email:magnetics@spang.com

DIMENSIONS

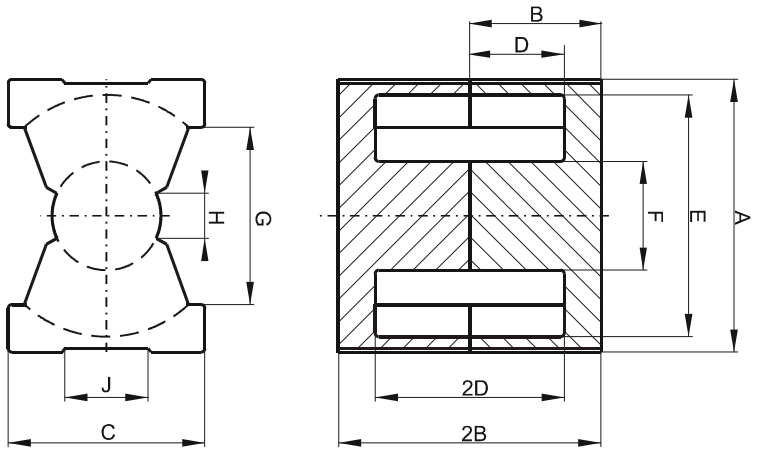

(mm)	Nominal:	Tol. min.:	Tol. max.:
A	27.3	-0.46	+ 0.46
B	10.1	-0.13	+ 0.13
2B	20.2	-0.25	+ 0.25
C	19.0	-0.45	+ 0.45
D	5.75	-0.15	+ 0.15
2D	11.5	-0.3	+ 0.3
E	22.5	-0.45	+ 0.45
F	12.0	-0.2	+ 0.2
G	15.5 Min.		
H	5.5 Min.		
J	10.0 Min.		
Eff. Parameters			
Ae mm ^{2}	**Amin mm ^{2}**	**le mm**	**Ve mm ^{3}**
121.0	109.0	45.0	5470

INDUCTANCE

AL value (nH)	Test conditions
7270 ± 25%	10 kHz, < 0.5 mT, 25 ℃

MARKING

0F42620UG
PXXXXX

CORE LOSSES

P_l max	Test conditions
229 mW/cm³ (1.25 W/set)	25 kHz, 200 mT, 100 ℃

NOTE

Spec. modifications	Previous	Revised
2005-06-22	A=27.71 Max. B=20.42 Max. Losses: General F material	A=27.76 Max. B=20.45 Max. Losses: Detail as indicated

A Division of Spang & Company

Specification for:

0R-42929-EC

110 Delta Drive
Pittsburgh, PA 15238
Phone: 412/696-1333
Fax: 412/696-0333
Email:magnetics@spang.com

DIMENSIONS

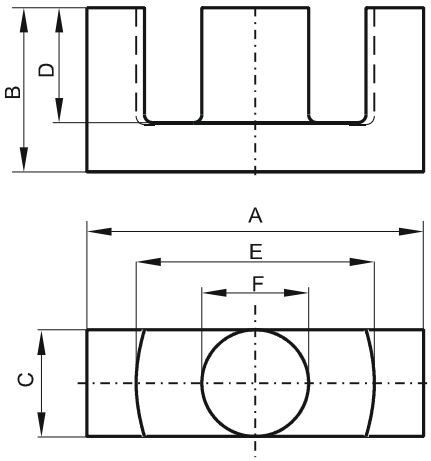

(mm)	Nominal:	Tol. min.:	Tol. max.:
A	30.6	-1.6	0.0
B	15.8	-0.2	+ 0.2
C	9.8	-0.6	0.0
D	11.0	-0.3	+ 0.3
E	22.0	0.0	+ 1.4
F	9.8	-0.6	0.0
Eff. Parameters			
Ae mm ^{2}	**Amin mm ^{2}**	**le mm**	**Ve mm ^{3}**
76.0	71.0	72.0	5470

INDUCTANCE

AL value (nH)	Test conditions
Nom: 2250 Min.: 1688	10 kHz, < 0.5 mT, 25 ℃

MARKING

R EC

CORE LOSSES

P_l max	Test conditions
91 mW/cm³ (0.5 W/set)	100 kHz, 100 mT, 100 ℃
548 mW/cm³ (3 W/set)	100 kHz, 200 mT, 100 ℃

A Division of Spang & Company

Specification for:

0P-42929-EC

110 Delta Drive
Pittsburgh, PA 15238
Phone: 412/696-1333
Fax: 412/696-0333
Email:magnetics@spang.com

DIMENSIONS

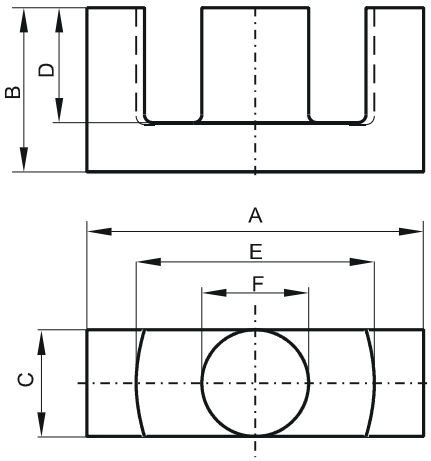

(mm)	Nominal:	Tol. min.:	Tol. max.:
A	30.6	-1.6	0.0
B	15.8	-0.2	+ 0.2
C	9.8	-0.6	0.0
D	11.0	-0.3	+ 0.3
E	22.0	0.0	+ 1.4
F	9.8	-0.6	0.0
Eff. Parameters			
Ae mm ^{2}	**Amin mm ^{2}**	**le mm**	**Ve mm ^{3}**
76.0	71.0	72.0	5470

INDUCTANCE

AL value (nH)	Test conditions
Nom: 2843 Min.: 2132	10 kHz, < 0.5 mT, 25 ℃

MARKING

P EC

CORE LOSSES

P_l max	Test conditions
126 mW/cm³ (0.69 W/set)	100 kHz, 100 mT, 100 ℃

A Division of Spang & Company

Specification for:

0F-42929-EC

110 Delta Drive
Pittsburgh, PA 15238
Phone: 412/696-1333
Fax: 412/696-0333
Email:magnetics@spang.com

DIMENSIONS

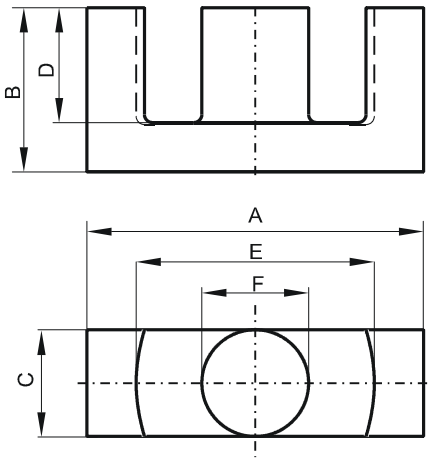

(mm)	Nominal:	Tol. min.:	Tol. max.:
A	30.6	-1.6	0.0
B	15.8	-0.2	+ 0.2
C	9.8	-0.6	0.0
D	11.0	-0.3	+ 0.3
E	22.0	0.0	+ 1.4
F	9.8	-0.6	0.0
Eff. Parameters			
Ae mm ^{2}	**Amin mm ^{2}**	**le mm**	**Ve mm ^{3}**
76.0	71.0	72.0	5470

INDUCTANCE

AL value (nH)	Test conditions
3316 ± 25%	10 kHz, < 0.5 mT, 25 ℃

MARKING

F
EC

CORE LOSSES

P_l max	Test conditions
205 mW/cm³ (1.12 W/set)	25 kHz, 200 mT, 100 ℃

A Division of Spang & Company

Specification for:

0F-43021-IC

110 Delta Drive
Pittsburgh, PA 15238
Phone: 412/696-1333
Fax: 412/696-0333
Email:magnetics@spang.com

DIMENSIONS

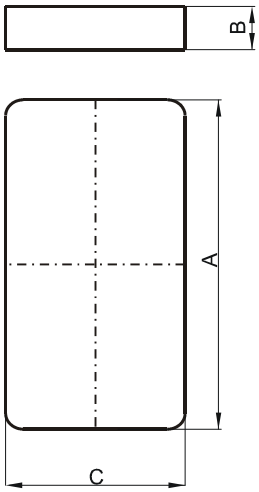

(mm)	Nominal:	Tol. min.:	Tol. max.:
A	30.0	-0.4	+ 0.4
B	2.7	-0.1	+ 0.1
C	20.0	-0.3	+ 0.3
Eff. Parameters (with 0_43021EC)			
Ae mm ^{2}	**Amin mm ^{2}**	**le mm**	**Ve mm ^{3}**
108.0	95.0	36.2	3910

INDUCTANCE

AL value (nH)	Test conditions (with 0F43021EC)
8850 ± 25%	10 kHz, < 0.5 mT, 25 ℃

MARKING

0F43021IC
PXXXXX

CORE LOSSES

P_l max	Test conditions
207 mW/cm³ (0.81 W/set)	25 kHz, 200 mT, 100 ℃

A Division of Spang & Company

Specification for:

0F-43030-EC

110 Delta Drive
Pittsburgh, PA 15238
Phone: 412/696-1333
Fax: 412/696-0333
Email:magnetics@spang.com

DIMENSIONS

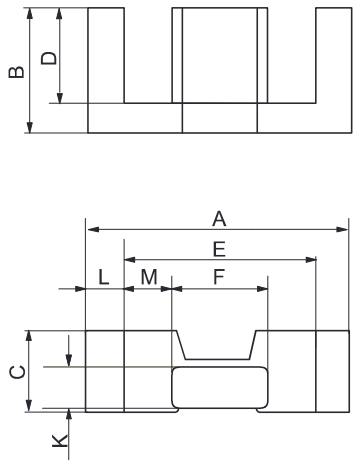

(mm)	Nominal:	Tol. min.:	Tol. max.:
A	30.0	-0.8	+ 0.8
B	15.0	-0.15	+ 0.15
C	9.1	-0.2	+ 0.2
D	11.2	-0.3	+ 0.3
E	22.4	-0.75	+ 0.75
F	14.6	-0.25	+ 0.25
K	4.9	-0.15	+ 0.15
L	3.8 Ref.		
M	3.9 Ref.		
Eff. Parameters			
Ae mm ^{2}	**Amin mm ^{2}**	**le mm**	**Ve mm ^{3}**
69.0	66.0	68.0	4700

INDUCTANCE

AL value (nH)	Test conditions
3137 ± 25%	10 kHz, < 0.5 mT, 25 ℃

MARKING

F
EC

CORE LOSSES

P_l max	Test conditions
211 mW/cm³ (0.99 W/set)	25 kHz, 200 mT, 100 ℃

A Division of Spang & Company

Specification for:

0F-43230-UG

110 Delta Drive
Pittsburgh, PA 15238
Phone: 412/696-1333
Fax: 412/696-0333
Email:magnetics@spang.com

DIMENSIONS

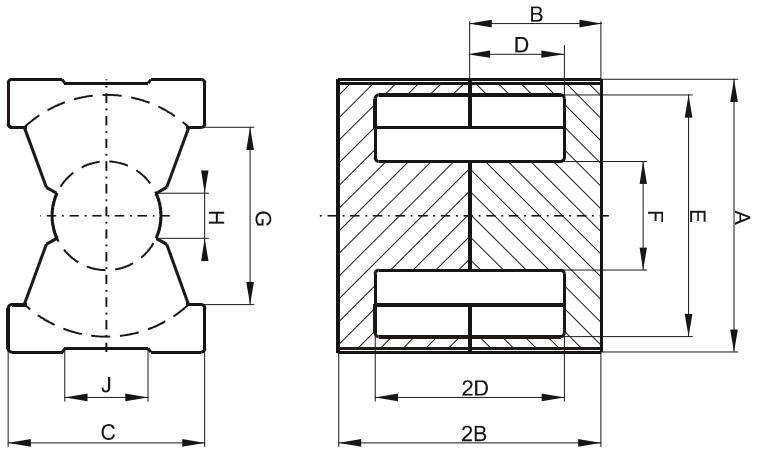

(mm)	Nominal:	Tol. min.:	Tol. max.:
A	33.0	-0.5	+ 0.5
B	15.15	-0.13	+ 0.13
2B	30.3	-0.25	+ 0.25
C	22.0	-0.5	+ 0.5
D	10.65	-0.15	+ 0.15
2D	21.3	-0.3	+ 0.3
E	27.5	-0.5	+ 0.5
F	13.5	-0.25	+ 0.25
G	19.0 Min.		
H	5.5 Min.		
J	11.6 Min.		
Eff. Parameters			
Ae mm ^{2}	**Amin mm ^{2}**	**le mm**	**Ve mm ^{3}**
167.0	142.0	74.7	12500

INDUCTANCE

AL value (nH)	Test conditions
6100 ± 25%	10 kHz, < 0.5 mT, 25 ℃

MARKING

0F43230UG
PXXXXX

CORE LOSSES

P_l max	Test conditions
208 mW/cm³ (2.6 W/set)	25 kHz, 200 mT, 100 ℃

NOTE

Spec. modifications	Previous	Revised
2005-06-22	2B=30.07 Min. F=13.72 Max. Losses: General F material	2B=30.05 Min. F=13.75 Max. Losses: Detail as indicated

A Division of Spang & Company

Specification for:

0P-43521-EC

110 Delta Drive
Pittsburgh, PA 15238
Phone: 412/696-1333
Fax: 412/696-0333
Email:magnetics@spang.com

DIMENSIONS

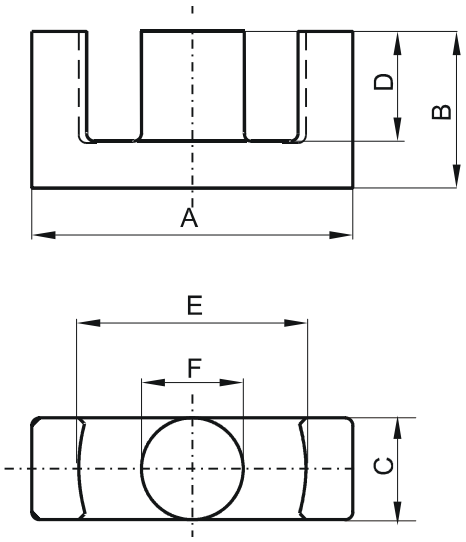

(mm)	Nominal:	Tol. min.:	Tol. max.:
A	35.0	-0.65	+ 0.65
B	20.7	-0.2	+ 0.2
C	11.4	-0.35	+ 0.35
D	14.75	-0.35	+ 0.35
E	26.15	-0.55	+ 0.55
F	11.3	-0.25	+ 0.25
Eff. Parameters			
Ae mm ^{2}	**Amin mm ^{2}**	**le mm**	**Ve mm ^{3}**
107.0	100.0	90.8	9710

INDUCTANCE

AL value (nH)	Test conditions
Nom: 2960 Min.: 2220	10 kHz, < 0.5 mT, 25 ℃

MARKING

P
EC

CORE LOSSES

P_l max	Test conditions
134 mW/cm³ (1.3 W/set)	100 kHz, 100 mT, 100 ℃

NOTE

Spec. modifications	Previous	Revised
2005-06-16	A=35.5 Max. A=34.5 Min. C=11.56 Max. E=26.62 Max. Losses: General P material	A=35.65 Max. A=34.35 Min. C=11.75 Max. E=26.7 Max. Losses: Detail as indicated

A Division of Spang & Company

Specification for:

0P-43535-UG

110 Delta Drive
Pittsburgh, PA 15238
Phone: 412/696-1333
Fax: 412/696-0333
Email:magnetics@spang.com

DIMENSIONS

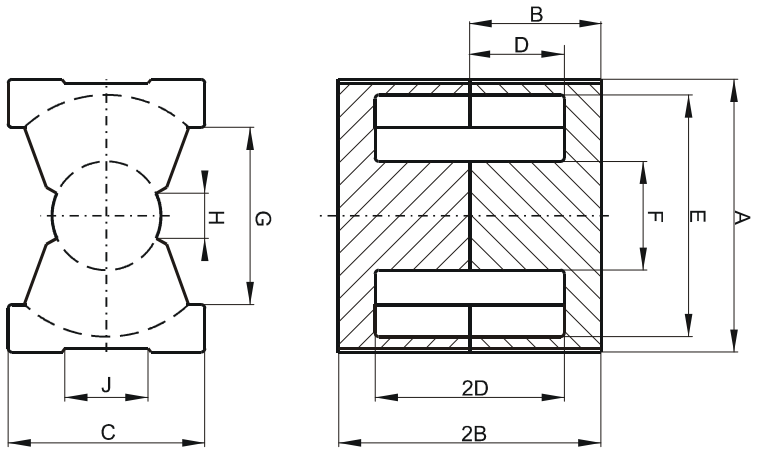

(mm)	Nominal:	Tol. min.:	Tol. max.:
A	36.1	-0.6	+ 0.6
B	17.35	-0.13	+ 0.13
2B	34.7	-0.25	+ 0.25
C	26.0	-0.5	+ 0.5
D	12.5	-0.15	+ 0.15
2D	25.0	-0.3	+ 0.3
E	32.0	-0.5	+ 0.5
F	14.4	-0.25	+ 0.25
G	23.5 Min.		
H	6.0 Min.		
J	11.8 Min.		
Eff. Parameters			
Ae mm ^{2}	**Amin mm ^{2}**	**le mm**	**Ve mm ^{3}**
190.0	162.0	86.1	16300

INDUCTANCE

AL value (nH)	Test conditions
Nom: 5240 Min.: 3930	10 kHz, < 0.5 mT, 25 ℃

MARKING

0P43535UG
PXXXXX

CORE LOSSES

P_l max	Test conditions
129 mW/cm³ (2.1 W/set)	100 kHz, 100 mT, 100 ℃

NOTE

Spec. modifications	Previous	Revised
2005-06-22	B=17.25 Min. 2B=34.49 Min. F=14.61Max. Losses: General P material	B=17.22 Min. 2B=34.45 Min. F=14.65 Max. Losses: Detail as indicated

A Division of Spang & Company

Specification for:

0R-43535-UG

110 Delta Drive
Pittsburgh, PA 15238
Phone: 412/696-1333
Fax: 412/696-0333
Email:magnetics@spang.com

DIMENSIONS

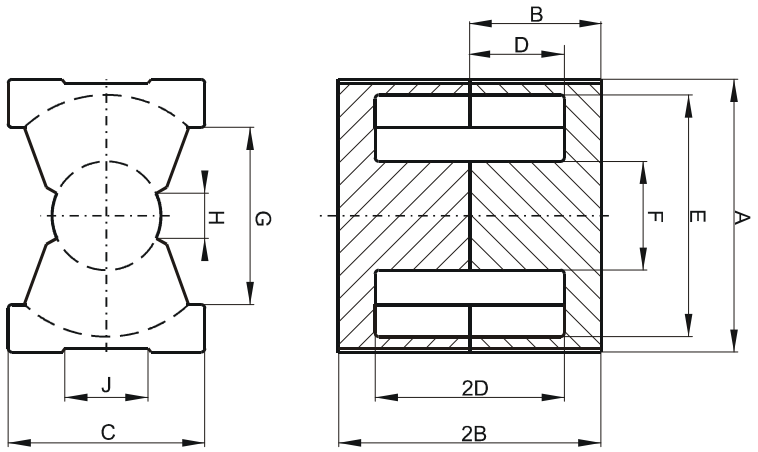

(mm)	Nominal:	Tol. min.:	Tol. max.:
A	36.1	-0.6	+ 0.6
B	17.35	-0.13	+ 0.13
2B	34.7	-0.25	+ 0.25
C	26.0	-0.5	+ 0.5
D	12.5	-0.15	+ 0.15
2D	25.0	-0.3	+ 0.3
E	32.0	-0.5	+ 0.5
F	14.4	-0.25	+ 0.25
G	23.5 Min.		
H	6.0 Min.		
J	11.8 Min.		
Eff. Parameters			
Ae mm ^{2}	**Amin mm ^{2}**	**le mm**	**Ve mm ^{3}**
190.0	162.0	86.1	16300

INDUCTANCE

AL value (nH)	Test conditions
Nom: 4813 Min.: 3610	10 kHz, < 0.5 mT, 25 ℃

MARKING

0R43535UG
PXXXXX

CORE LOSSES

P_l max	Test conditions
98 mW/cm³ (1.6 W/set)	100 kHz, 100 mT, 100 ℃
613 mW/cm³ (10.0 W/set)	100 kHz, 200 mT, 100 ℃

NOTE

Spec. modifications	Previous	Revised
2005-06-22	B=17.25 Min. 2B=34.49 Min. F=14.61Max. Losses: General R material	B=17.22 Min. 2B=34.45 Min. F=14.65 Max. Losses: Detail as indicated

A Division of Spang & Company

Specification for:

0F-43618-EC

110 Delta Drive
Pittsburgh, PA 15238
Phone: 412/696-1333
Fax: 412/696-0333
Email:magnetics@spang.com

DIMENSIONS

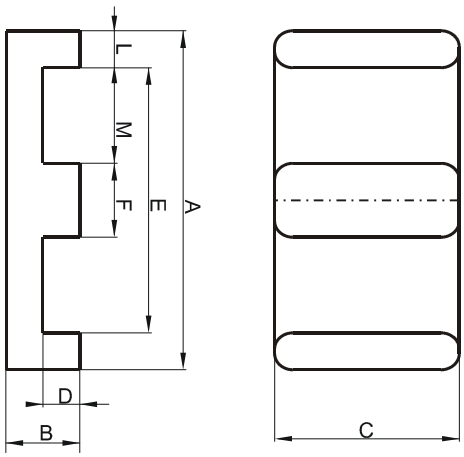

(mm)	Nominal:	Tol. min.:	Tol. max.:
A	35.56	-0.5	+ 0.5
B	6.35	-0.13	+ 0.13
C	17.8	-0.4	+ 0.4
D	2.41 Min.		
E	27.2 Min.		
F	7.62	-0.18	+ 0.18
L	3.81	-0.13	+ 0.13
M	10.16	-0.25	+ 0.25
Eff. Parameters			
Ae mm ^{2}	Amin mm ^{2}	le mm	Ve mm ^{3}
135	135	42.4	5750

INDUCTANCE

AL value (nH)	Test conditions
8039 ± 25%	10 kHz, < 0.5 mT, 25 ℃

MARKING

0F43618EC
PXXXXX

CORE LOSSES

P_l max	Test conditions
205 mW/cm³ (1.18 W/set)	25 kHz, 200 mT, 100 ℃

NOTE

Spec. modifications	Previous	Revised
2005-06-22	AL=9020±25% C=18.16 Max. Losses: General F material	AL=8039±25% C=18.2 Max. Losses: Detail as indicated

A Division of Spang & Company

Specification for:

0F-43618-IC

110 Delta Drive
Pittsburgh, PA 15238
Phone: 412/696-1333
Fax: 412/696-0333
Email:magnetics@spang.com

DIMENSIONS

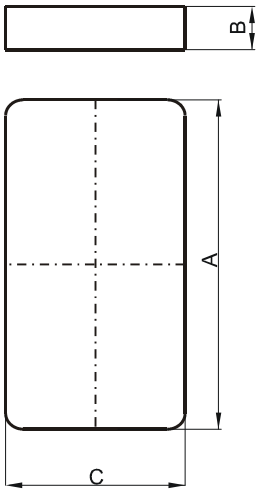

(mm)	Nominal:	Tol. min.:	Tol. max.:
A	35.56	-0.5	+ 0.5
B	3.68	-0.3	+ 0.3
C	17.8	-0.4	+ 0.4
Eff. Parameters (with 0_43681EC)			
Ae mm ^{2}	**Amin mm ^{2}**	**le mm**	**Ve mm ^{3}**
135.0	135.0	37.4	5060

INDUCTANCE

AL value (nH)	Test conditions (with 0F43618EC)
8729 ± 25%	10 kHz, < 0.5 mT, 25 ℃

MARKING

0F43618IC
PXXXXX

CORE LOSSES

P_l max	Test conditions
206 mW/cm³ (1.04 W/set)	25 kHz, 200 mT, 100 ℃

NOTE

Spec. modifications	Previous	Revised
2005-06-22	AL=10250±25% Losses: General F material	AL=9725±25% Losses: Detail as indicated

MAGNETICS®
A Division of Spang & Company

Specification for:

0R-43618-IC

110 Delta Drive
Pittsburgh, PA 15238
Phone: 412/696-1333
Fax: 412/696-0333
Email:magnetics@spang.com

DIMENSIONS

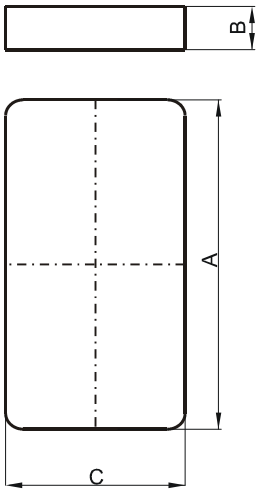

(mm)	Nominal:	Tol. min.:	Tol. max.:
A	35.56	-0.5	+ 0.5
B	3.68	-0.3	+ 0.3
C	17.8	-0.4	+ 0.4
Eff. Parameters (with 0_43681EC)			
Ae mm ^{2}	**Amin mm ^{2}**	**le mm**	**Ve mm ^{3}**
135.0	135.0	37.4	5060

INDUCTANCE

AL value (nH)	Test conditions (with 0R43618EC)
Nom: 7303 Min.: 5477	10 kHz, < 0.5 mT, 25 ℃

MARKING

0R43618IC
PXXXXX

CORE LOSSES

P_l max	Test conditions
95 mW/cm³ (0.48 W/set)	100 kHz, 100 mT, 100 ℃
580 mW/cm³ (2.9 W/set)	100 kHz, 200 mT, 100 ℃

NOTE

Spec. modifications	Previous	Revised
2005-06-22	Losses: General R material	Losses: Detail as indicated

A Division of Spang & Company

Specification for:

0P-43618-IC

110 Delta Drive
Pittsburgh, PA 15238
Phone: 412/696-1333
Fax: 412/696-0333
Email:magnetics@spang.com

DIMENSIONS

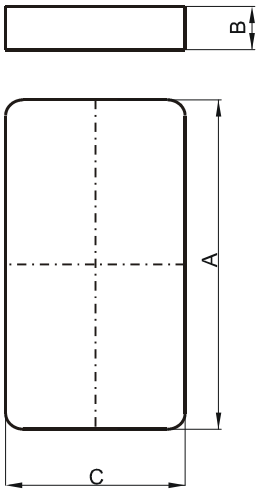

(mm)	Nominal:	Tol. min.:	Tol. max.:
A	35.56	-0.5	+ 0.5
B	3.68	-0.3	+ 0.3
C	17.8	-0.4	+ 0.4
Eff. Parameters (with 0_43681EC)			
Ae mm ^{2}	**Amin mm ^{2}**	**le mm**	**Ve mm ^{3}**
135.0	135.0	37.4	5060

INDUCTANCE

AL value (nH)	Test conditions (with 0P43618EC)
Nom: 7736 Min.: 5802	10 kHz, < 0.5 mT, 25 ℃

MARKING

0P43618IC PXXXXX

CORE LOSSES

P_l max	Test conditions
120 mW/cm³ (0.61 W/set)	100 kHz, 100 mT, 100 ℃

NOTE

Spec. modifications	Previous	Revised
2005-06-22	AL=6400 Min. AL=8533 Nom. Losses: General P material	AL=5802 Min. AL=7736 Nom. Losses: Detail as indicated

A Division of Spang & Company

Specification for:

0F-44008-EC

110 Delta Drive
Pittsburgh, PA 15238
Phone: 412/696-1333
Fax: 412/696-0333
Email:magnetics@spang.com

DIMENSIONS

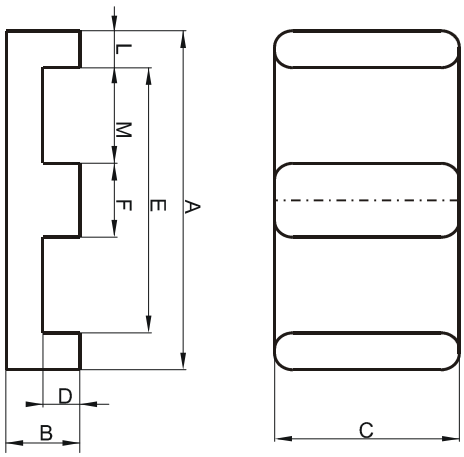

(mm)	Nominal:	Tol. min.:	Tol. max.:
A	40.65	-0.5	+ 0.5
B	8.51	-0.25	+ 0.25
C	10.7	-0.25	+ 0.25
D	4.06	-0.25	+ 0.25
E	30.45	-0.3	+ 0.3
F	10.15	-0.15	+ 0.15
L	5.1 Ref.		
M	10.15 Ref.		
Eff. Parameters			
Ae mm ^{2}	**Amin mm ^{2}**	**le mm**	**Ve mm ^{3}**
101	95.1	51.9	5220

INDUCTANCE

AL value (nH)	Test conditions
5134 ± 25%	10 kHz, < 0.5 mT, 25 ℃

MARKING

F
EC

CORE LOSSES

P_l max	Test conditions
211 mW/cm³ (1.1 W/set)	25 kHz, 200 mT, 100 ℃

NOTE

Spec. modifications	Previous	Revised
2005-06-22	AL=5488±25% L=5.08±0.13 Losses: General F material	AL=5134±25% L=5.1 Ref. Losses: Detail as indicated

A Division of Spang & Company

Specification for:

0F-44008-IC

110 Delta Drive
Pittsburgh, PA 15238
Phone: 412/696-1333
Fax: 412/696-0333
Email:magnetics@spang.com

DIMENSIONS

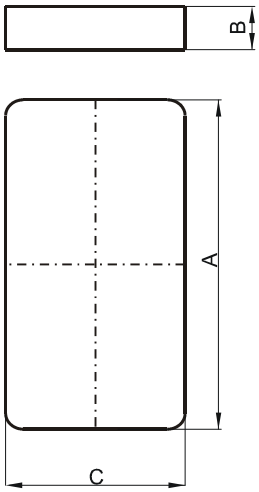

(mm)	Nominal:	Tol. min.:	Tol. max.:
A	40.64	-0.51	+ 0.51
B	4.45	-0.25	+ 0.25
C	10.7	-0.25	+ 0.25
Eff. Parameters (with 0_44008EC)			
Ae mm ^{2}	**Amin mm ^{2}**	**le mm**	**Ve mm ^{3}**
99.5	95.1	43.8	4360

INDUCTANCE

AL value (nH)	Test conditions (with 0F44008EC)
5706 ± 25%	10 kHz, < 0.5 mT, 25 ℃

MARKING

F
IC

CORE LOSSES

P_l max	Test conditions
206 mW/cm³ (0.9 W/set)	25 kHz, 200 mT, 100 ℃

NOTE

Spec. modifications	Previous	Revised
2005-06-22	AL=6421±25% Losses: General F material	AL=5706±25% Losses: Detail as indicated

MAGNETICS®
A Division of Spang & Company

Specification for:

0R-44008-IC

110 Delta Drive
Pittsburgh, PA 15238
Phone: 412/696-1333
Fax: 412/696-0333
Email:magnetics@spang.com

DIMENSIONS

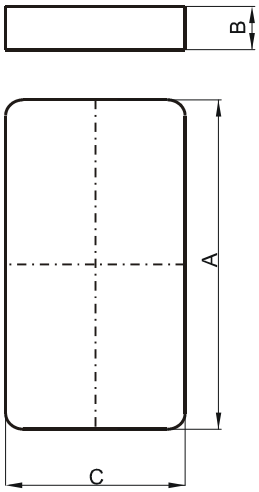

(mm)	Nominal:	Tol. min.:	Tol. max.:
A	40.64	-0.51	+ 0.51
B	4.45	-0.25	+ 0.25
C	10.7	-0.25	+ 0.25
Eff. Parameters (with 0_44008EC)			
Ae mm ^{2}	**Amin mm ^{2}**	**le mm**	**Ve mm ^{3}**
99.5	95.1	43.8	4360

INDUCTANCE

AL value (nH)	Test conditions (with 0R44008EC)
Nom: 4744 Min.: 3558	10 kHz, < 0.5 mT, 25 ℃

MARKING

R
IC

CORE LOSSES

P_l max	Test conditions
92 mW/cm³ (0.4 W/set)	100 kHz, 100 mT, 100 ℃
550 mW/cm³ (2.4 W/set)	100 kHz, 200 mT, 100 ℃

NOTE

Spec. modifications	Previous	Revised
2005-06-22	Losses: General R material	Losses: Detail as indicated

A Division of Spang & Company

Specification for:

0P-44008-IC

110 Delta Drive
Pittsburgh, PA 15238
Phone: 412/696-1333
Fax: 412/696-0333
Email:magnetics@spang.com

DIMENSIONS

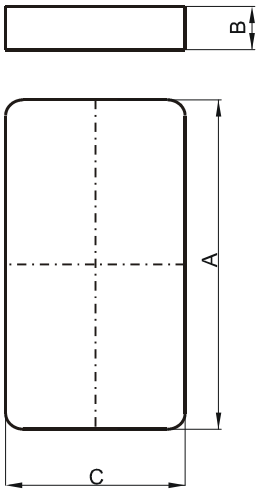

(mm)	Nominal:	Tol. min.:	Tol. max.:
A	40.64	-0.51	+ 0.51
B	4.45	-0.25	+ 0.25
C	10.7	-0.25	+ 0.25
Eff. Parameters (with 0_44008EC)			
Ae mm ^{2}	**Amin mm ^{2}**	**le mm**	**Ve mm ^{3}**
99.5	95.1	43.8	4360

INDUCTANCE

AL value (nH)	Test conditions (with 0P44008EC)
Nom: 5035 Min.: 3776	10 kHz, < 0.5 mT, 25 ℃

MARKING

P
IC

CORE LOSSES

P_l max	Test conditions
115 mW/cm³ (0.5 W/set)	100 kHz, 100 mT, 100 ℃

NOTE

Spec. modifications	Previous	Revised
2005-06-22	Losses: General P material	Losses: Detail as indicated

A Division of Spang & Company

Specification for:

0J-44008-IC

110 Delta Drive
Pittsburgh, PA 15238
Phone: 412/696-1333
Fax: 412/696-0333
Email:magnetics@spang.com

DIMENSIONS

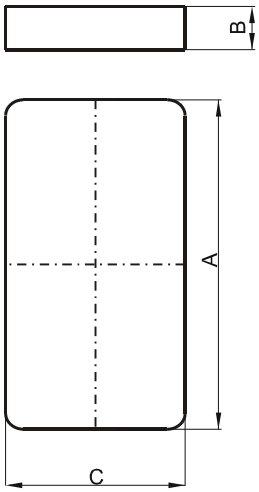

(mm)	Nominal:	Tol. min.:	Tol. max.:
A	40.64	-0.51	+ 0.51
B	4.45	-0.25	+ 0.25
C	10.7	-0.25	+ 0.25
Eff. Parameters (with 0_44008EC)			
Ae mm ^{2}	**Amin mm ^{2}**	**le mm**	**Ve mm ^{3}**
99.5	95.1	43.8	4360

INDUCTANCE

AL value (nH)	Test conditions (with 0J44008EC)
Nom: 7780 Min.: 5835	10 kHz, < 0.5 mT, 25 ℃

MARKING

No marking

LOSS FACTOR

tan δ/μ (x10^{-6})	Test conditions
< 36	100 kHz, < 0.25 mT, 25 ℃

NOTE

Spec. modifications	Previous	Revised
2005-06-22	Al=8026 Min. Loss factor: General J material	Al=5835 Min. Losses: Detail as indicated

A Division of Spang & Company

Specification for:

0F-44121-UC

110 Delta Drive
Pittsburgh, PA 15238
Phone: 412/696-1333
Fax: 412/696-0333
Email:magnetics@spang.com

DIMENSIONS

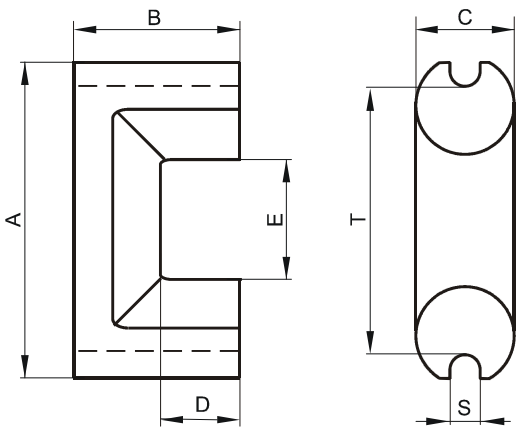

(mm)	Nominal:	Tol. min.:	Tol. max.:
A	41.78	-0.81	+ 0.81
B	20.62	-0.13	+ 0.13
C	11.94	-0.25	+ 0.25
D	11.1	-0.2	+ 0.2
E	18.8	-0.56	+ 0.56
S	3.18	-0.13	+ 0.13
T	34.66 Nom.		
Eff. Parameters			
Ae mm ^{2}	**Amin mm ^{2}**	**le mm**	**Ve mm ^{3}**
114.3	105.4	115.2	13172

INDUCTANCE

AL value (nH)	Test conditions
2465 ± 25%	10 kHz, < 0.5 mT, 25 ℃

MARKING

F
UC

CORE LOSSES

P_l max	Test conditions
213 mW/cm³ (2.8 W/set)	25 kHz, 200 mT, 100 ℃

NOTE

Spec. modifications	Previous	Revised
2005-06-22	A=42.37 Max. A=41.55 Min. C=11.94 Max. E=18.42 Min. T=35.3 Ref. Losses: General P material	A=42.59 Max. A=40.97 Min. C=12.19 Max. E=18.24 Min. T=34.66 Ref. Losses: Detail as indicated

A Division of Spang & Company

Specification for:

0F-44216-EC

110 Delta Drive
Pittsburgh, PA 15238
Phone: 412/696-1333
Fax: 412/696-0333
Email:magnetics@spang.com

DIMENSIONS

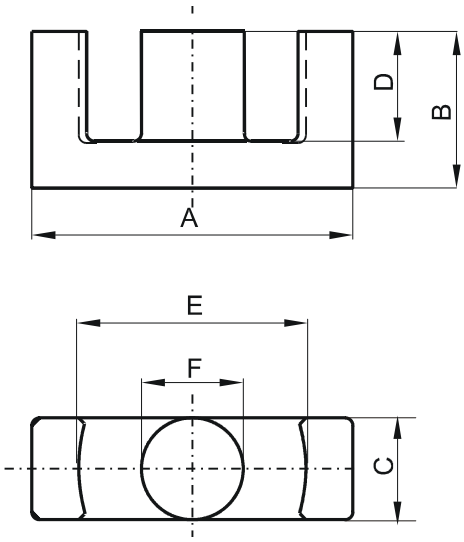

(mm)	Nominal:	Tol. min.:	Tol. max.:
A	42.15	-0.85	+ 0.85
B	21.6	-0.2	+ 0.2
C	14.7	-0.3	+ 0.3
D	15.6 Min.		
E	31.0	-0.6	+ 0.6
F	14.7	-0.3	+ 0.3
Eff. Parameters			
Ae mm ^{2}	**Amin mm ^{2}**	**le mm**	**Ve mm ^{3}**
175.0	166.0	98.7	17300

INDUCTANCE

AL value (nH)	Test conditions
5000 ± 25%	10 kHz, < 0.5 mT, 25 ℃

MARKING

F
EC
PXXXXX

CORE LOSSES

P_l max	Test conditions
202 mW/cm³ (3.5 W/set)	25 kHz, 200 mT, 100 ℃

NOTE

Spec. modifications	Previous	Revised
2005-06-22	A=42.1±0.81 E=31.0±0.58 Losses: General F material	A=42.15±0.85 E=31.0±0.6 Losses: Detail as indicated

A Division of Spang & Company

Specification for:

0R-44308-EC

110 Delta Drive
Pittsburgh, PA 15238
Phone: 412/696-1333
Fax: 412/696-0333
Email:magnetics@spang.com

DIMENSIONS

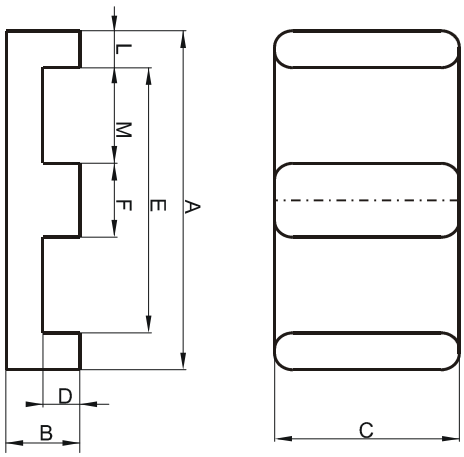

(mm)	Nominal:	Tol. min.:	Tol. max.:
A	43.2	-0.5	+ 0.5
B	8.51	-0.25	+ 0.25
C	27.94	-0.38	+ 0.38
D	4.19 Min.		
E	34.4 Min.		
F	8.13	-0.13	+ 0.13
L	4.2 Nom.		
M	13.46 Nom.		
Eff. Parameters			
Ae mm ^{2}	**Amin mm ^{2}**	**le mm**	**Ve mm ^{3}**
227	227	57.5	13100

INDUCTANCE

AL value (nH)	Test conditions
Nom: 8598 Min.: 6449	10 kHz, < 0.5 mT, 25 ℃

MARKING

0R44308EC
PXXXXX

CORE LOSSES

P_l max	Test conditions
107 mW/cm³ (1.4 W/set)	100 kHz, 100 mT, 100 ℃
611 mW/cm³ (8 W/set)	100 kHz, 200 mT, 100 ℃

NOTE

Spec. modifications	Previous	Revised
2005-06-01	Flat tooling resulting in sharp corners L=4.06±0.13 Losses: General R material	Multilevel tooling resulting in radius corners L=4.2 Nom. Losses: Detail as indicated

A Division of Spang & Company

Specification for:

0F-44308-EC

110 Delta Drive
Pittsburgh, PA 15238
Phone: 412/696-1333
Fax: 412/696-0333
Email:magnetics@spang.com

DIMENSIONS

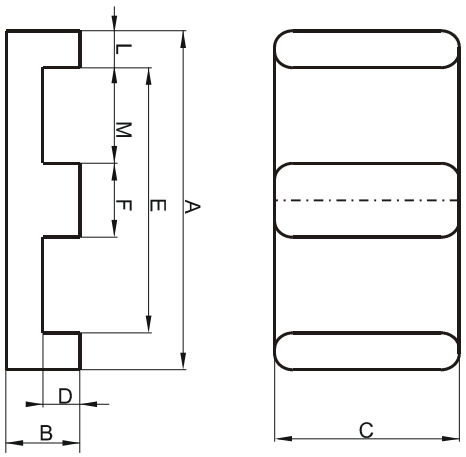

(mm)	Nominal:	Tol. min.:	Tol. max.:
A	43.2	-0.5	+ 0.5
B	8.51	-0.25	+ 0.25
C	27.94	-0.38	+ 0.38
D	4.19 Min.		
E	34.4 Min.		
F	8.13	-0.13	+ 0.13
L	4.2 Nom.		
M	13.46 Nom.		
Eff. Parameters			
Ae mm ^{2}	**Amin mm ^{2}**	**le mm**	**Ve mm ^{3}**
227	227	57.5	13100

INDUCTANCE

AL value (nH)	Test conditions
10432 ± 25%	10 kHz, < 0.5 mT, 25 ℃

MARKING

0F44308EC
PXXXXX

CORE LOSSES

P_l max	Test conditions
206 mW/cm³ (2.7 W/set)	25 kHz, 200 mT, 100 ℃

NOTE

Spec. modifications	Previous	Revised
2005-06-01	Flat tooling resulting in sharp corners AL=11172±25% L=4.06±0.13 Losses: General F material	Multilevel tooling resulting in radius corners AL=10432±25% L=4.2 Nom. Losses: Detail as indicated

MAGNETICS®
A Division of Spang & Company

Specification for:

0R-44308-IC

110 Delta Drive
Pittsburgh, PA 15238
Phone: 412/696-1333
Fax: 412/696-0333
Email:magnetics@spang.com

DIMENSIONS

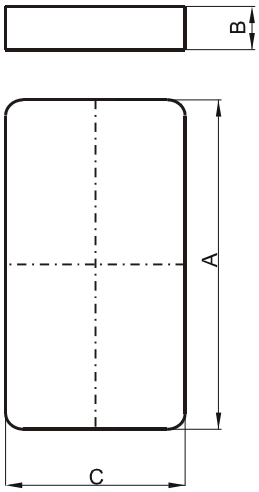

(mm)	Nominal:	Tol. min.:	Tol. max.:
A	43.2	-0.9	+ 0.9
B	4.1	-0.13	+ 0.13
C	27.9	-0.6	+ 0.6
Eff. Parameters (with 0_44308EC)			
Ae mm ^{2}	**Amin mm ^{2}**	**le mm**	**Ve mm ^{3}**
229.0	229.0	50.4	11500

INDUCTANCE

AL value (nH)	Test conditions (with 0R44308EC)
Nom: 9541 Min.: 7156	10 kHz, < 0.5 mT, 25 ℃

MARKING

0R44308IC
PXXXXX

CORE LOSSES

P_l max	Test conditions
104 mW/cm³ (1.2 W/set)	100 kHz, 100 mT, 100 ℃
608 mW/cm³ (7.0 W/set)	100 kHz, 200 mT, 100 ℃

NOTE

Spec. modifications	Previous	Revised
2005-06-16	A=43.7 Max. A=42.7 Min. C=28.3 Max. C=27.6 Min. Losses: General R material	A=44.1 Max. A=42.3 Min. C=28.5 Max. C=27.3 Min. Losses: Detail as indicated

A Division of Spang & Company

Specification for:

0F-44308-IC

110 Delta Drive
Pittsburgh, PA 15238
Phone: 412/696-1333
Fax: 412/696-0333
Email:magnetics@spang.com

DIMENSIONS

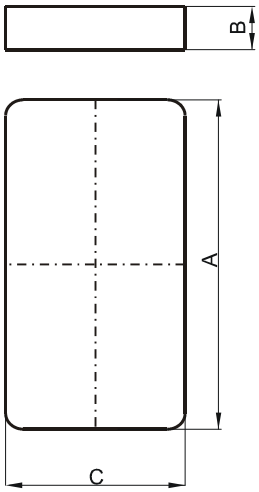

(mm)	Nominal:	Tol. min.:	Tol. max.:
A	43.2	-0.9	+ 0.9
B	4.1	-0.13	+ 0.13
C	27.9	-0.6	+ 0.6
Eff. Parameters (with 0_44308EC)			
Ae mm ^{2}	**Amin mm ^{2}**	**le mm**	**Ve mm ^{3}**
229.0	229.0	50.4	11500

INDUCTANCE

AL value (nH)	Test conditions (with 0F44308EC)
11489 ± 25%	10 kHz, < 0.5 mT, 25 ℃

MARKING

0F44308IC
PXXXXX

CORE LOSSES

P_l max	Test conditions
209 mW/cm³ (2.4 W/set)	25 kHz, 200 mT, 100 ℃

NOTE

Spec. modifications	Previous	Revised
2005-06-16	AL=11172±25% A=43.7 Max. A=42.7 Min. C=28.3 Max. C=27.6 Min. Losses: General F material	AL=11489±25% A=44.1 Max. A=42.3 Min. C=28.5 Max. C=27.3 Min. Losses: Detail as indicated

A Division of Spang & Company

Specification for:

FF-45810-EC

110 Delta Drive
Pittsburgh, PA 15238
Phone: 412/696-1333
Fax: 412/696-0333
Email:magnetics@spang.com

DIMENSIONS

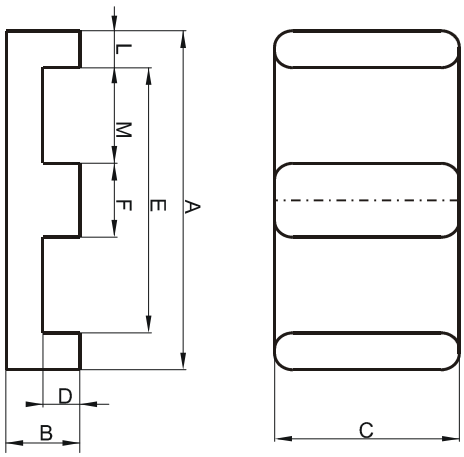

(mm)	Nominal:	Tol. min.:	Tol. max.:
A	58.42	-1.2	+ 1.2
B	10.54	-0.2	+ 0.2
C	38.1	-0.8	+ 0.8
D	6.35 Min.		
E	50.0 Min.		
F	8.1	-0.2	+ 0.2
L	3.7 Ref.		
M	21.4 Ref.		
Eff. Parameters			
Ae mm ^{2}	**Amin mm ^{2}**	**le mm**	**Ve mm ^{3}**
308	308	80.6	24600

INDUCTANCE

AL value (nH)	Test conditions
10427 ± 25%	10 kHz, < 0.5 mT, 25 ℃

MARKING

FF45810EC
PXXXXX

CORE LOSSES

P_l max	Test conditions
207 mW/cm³ (5.1 W/set)	25 kHz, 200 mT, 100 ℃

NOTE

Spec. modifications	Previous	Revised
2005-06-22	AL=12551±25% E=50.39 Min. Losses: General F material	AL=10427±25% E=50.0 Min. Losses: Detail as indicated

A Division of Spang & Company

Specification for:

FR-45810-IC

110 Delta Drive
Pittsburgh, PA 15238
Phone: 412/696-1333
Fax: 412/696-0333
Email:magnetics@spang.com

DIMENSIONS

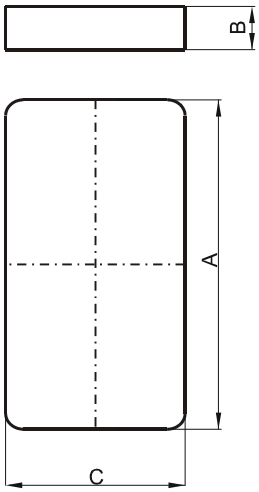

(mm)	Nominal:	Tol. min.:	Tol. max.:
A	58.42	-1.2	+ 1.2
B	4.1	-0.12	+ 0.12
C	38.1	-0.8	+ 0.8
Eff. Parameters (with F_45810EC)			
Ae mm ^{2}	**Amin mm ^{2}**	**le mm**	**Ve mm ^{3}**
310	310	67.7	20800

INDUCTANCE

AL value (nH)	Test conditions (with FR45810EC)
Nom: 9821 Min.: 7366	10 kHz, < 0.5 mT, 25 ℃

MARKING

FR45810IC
PXXXXX

CORE LOSSES

P_l max	Test conditions
97 mW/cm³ (2.0 W/set)	100 kHz, 100 mT, 100 ℃
625 mW/cm³ (13 W/set)	100 kHz, 200 mT, 100 ℃

NOTE

Spec. modifications	Previous	Revised
2005-06-22	B=4.04±0.12 Losses: General R material	B=4.1±0.12 Losses: Detail as indicated

A Division of Spang & Company

Specification for:

FP-45810-IC

110 Delta Drive
Pittsburgh, PA 15238
Phone: 412/696-1333
Fax: 412/696-0333
Email:magnetics@spang.com

DIMENSIONS

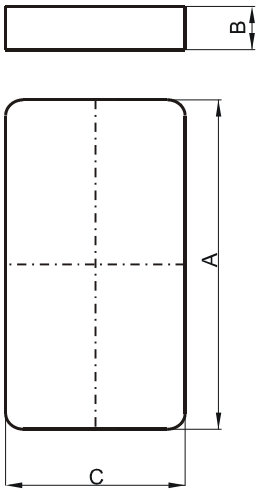

(mm)	Nominal:	Tol. min.:	Tol. max.:
A	58.42	-1.2	+ 1.2
B	4.1	-0.12	+ 0.12
C	38.1	-0.8	+ 0.8
Eff. Parameters (with F_45810EC)			
Ae mm ^{2}	**Amin mm ^{2}**	**le mm**	**Ve mm ^{3}**
310	310	67.7	20800

INDUCTANCE

AL value (nH)	Test conditions (with FP45810EC)
Nom: 10457 Min.: 7843	10 kHz, < 0.5 mT, 25 ℃

MARKING

FP45810IC
PXXXXX

CORE LOSSES

P_l max	Test conditions
145 mW/cm³ (3 W/set)	100 kHz, 100 mT, 100 ℃

NOTE

Spec. modifications	Previous	Revised
2005-06-22	B=4.04±0.12 Losses: General P material	B=4.1±0.12 Losses: Detail as indicated

A Division of Spang & Company

Specification for:

FF-45810-IC

110 Delta Drive
Pittsburgh, PA 15238
Phone: 412/696-1333
Fax: 412/696-0333
Email:magnetics@spang.com

DIMENSIONS

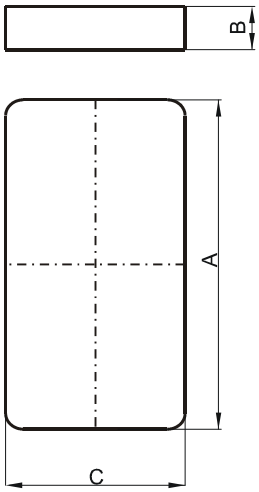

(mm)	Nominal:	Tol. min.:	Tol. max.:
A	58.42	-1.2	+ 1.2
B	4.1	-0.12	+ 0.12
C	38.1	-0.8	+ 0.8
Eff. Parameters (with F_45810EC)			
Ae mm ^{2}	**Amin mm ^{2}**	**le mm**	**Ve mm ^{3}**
310	310	67.7	20800

INDUCTANCE

AL value (nH)	Test conditions (with FF45810EC)
11941 ± 25%	10 kHz, < 0.5 mT, 25 ℃

MARKING

FF45810IC
PXXXXX

CORE LOSSES

P_l max	Test conditions
208 mW/cm³ (4.3 W/set)	25 kHz, 200 mT, 100 ℃

NOTE

Spec. modifications	Previous	Revised
2005-06-22	AL=14811±25% B=4.04±0.12 Losses: General F material	AL=11941±25% B=4.1±0.12 Losses: Detail as indicated

A Division of Spang & Company

Specification for:

0F-45959-EC

110 Delta Drive
Pittsburgh, PA 15238
Phone: 412/696-1333
Fax: 412/696-0333
Email:magnetics@spang.com

DIMENSIONS

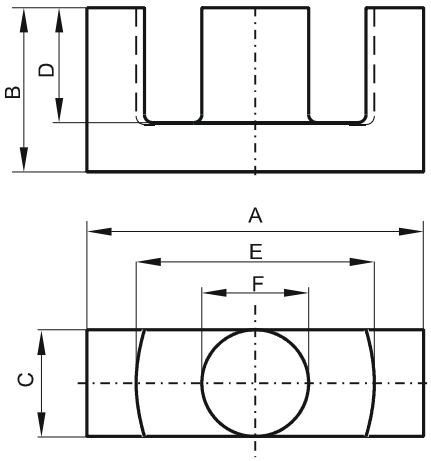

(mm)	Nominal:	Tol. min.:	Tol. max.:
A	59.8	-1.3	+ 1.3
B	31.0	-0.2	+ 0.2
C	21.65	-0.45	+ 0.45
D	22.1 Min.		
E	44.7	-1.09	+ 1.09
F	21.65	-0.45	+ 0.45
Eff. Parameters			
Ae mm ^{2}	**Amin mm ^{2}**	**le mm**	**Ve mm ^{3}**
368.0	360.0	139.0	51500

INDUCTANCE

AL value (nH)	Test conditions
7500 ± 25%	10 kHz, < 0.5 mT, 25 ℃

MARKING

0F45959EC
PXXXXX

CORE LOSSES

P_l max	Test conditions
205 mW/cm³ (10.6 W/set)	25 kHz, 200 mT, 100 ℃

NOTE

Spec. modifications	Previous	Revised
2005-06-22	Losses: General F material	Losses: Detail as indicated

A Division of Spang & Company

Specification for:

FR-46410-EC

110 Delta Drive
Pittsburgh, PA 15238
Phone: 412/696-1333
Fax: 412/696-0333
Email:magnetics@spang.com

DIMENSIONS

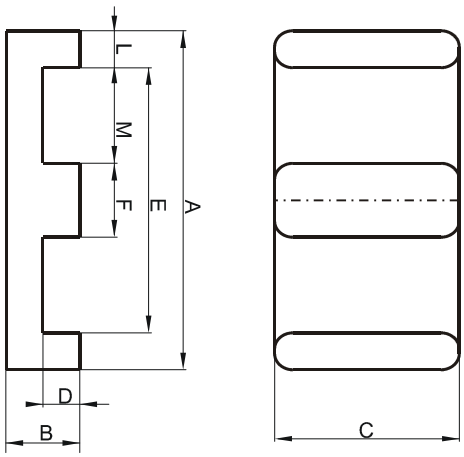

(mm)	Nominal:	Tol. min.:	Tol. max.:
A	64.0	-0.76	+ 0.76
B	10.2	-0.1	+ 0.1
C	50.8	-0.81	+ 0.81
D	5.03 Min.		
E	53.16 Min.		
F	10.16	-0.18	+ 0.18
L	5.08	-0.12	+ 0.12
M	21.8	-0.25	+ 0.25
Eff. Parameters			
Ae mm ^{2}	**Amin mm ^{2}**	**le mm**	**Ve mm ^{3}**
516.0	516.0	80.2	41400

INDUCTANCE

AL value (nH)	Test conditions
Nom: 14618 Min.: 10964	10 kHz, < 0.5 mT, 25 ℃

MARKING

FR46410EC
PXXXXX

CORE LOSSES

P_l max	Test conditions
87 mW/cm³ (3.6 W/set)	100 kHz, 100 mT, 100 ℃
614 mW/cm³ (25 W/set)	100 kHz, 200 mT, 100 ℃

NOTE

Spec. modifications	Previous	Revised
2005-06-22	AL=11100 Min. AL=14800 Nom. M=21.59 Min. Losses: General R material	AL=10964 Min. AL=14618 Nom. M=21.55 Min. Losses: Detail as indicated

A Division of Spang & Company

Specification for:

FP-46410-EC

110 Delta Drive
Pittsburgh, PA 15238
Phone: 412/696-1333
Fax: 412/696-0333
Email:magnetics@spang.com

DIMENSIONS

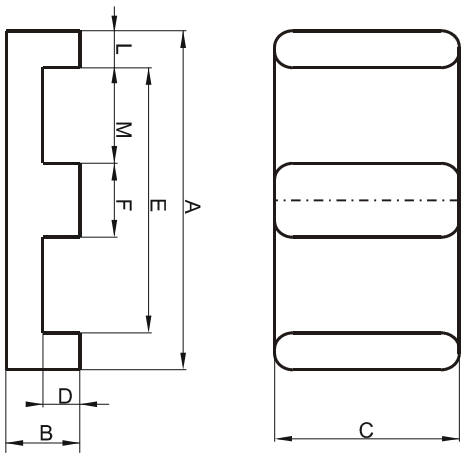

(mm)	Nominal:	Tol. min.:	Tol. max.:
A	64.0	-0.76	+ 0.76
B	10.2	-0.1	+ 0.1
C	50.8	-0.81	+ 0.81
D	5.03 Min.		
E	53.16 Min.		
F	10.16	-0.18	+ 0.18
L	5.08	-0.12	+ 0.12
M	21.8	-0.25	+ 0.25
Eff. Parameters			
Ae mm ^{2}	**Amin mm ^{2}**	**le mm**	**Ve mm ^{3}**
516.0	516.0	80.2	41400

INDUCTANCE

AL value (nH)	Test conditions
Nom: 15599 Min.: 11699	10 kHz, < 0.5 mT, 25 ℃

MARKING

FP46410EC
PXXXXX

CORE LOSSES

P_l max	Test conditions
116 mW/cm³ (4.8 W/set)	100 kHz, 100 mT, 100 ℃

NOTE

Spec. modifications	Previous	Revised
2005-06-22	AL=12100 Min. AL=16133 Nom. M=21.59 Min. Losses: General P material	AL=11699 Min. AL=15599 Nom. M=21.55 Min. Losses: Detail as indicated

A Division of Spang & Company

Specification for:

FP-46410-IC

110 Delta Drive
Pittsburgh, PA 15238
Phone: 412/696-1333
Fax: 412/696-0333
Email:magnetics@spang.com

DIMENSIONS

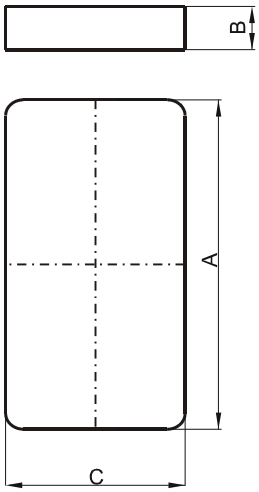

(mm)	Nominal:	Tol. min.:	Tol. max.:
A	64.01	-1.27	+ 1.27
B	5.08	-0.13	+ 0.13
C	50.8	-1.02	+ 1.02
Eff. Parameters (with F_46410EC)			
Ae mm ^{2}	**Amin mm ^{2}**	**le mm**	**Ve mm ^{3}**
511.0	511.0	69.6	35539

INDUCTANCE

AL value (nH)	Test conditions (with FP46410EC)
Nom: 17245 Min.: 12934	10 kHz, < 0.5 mT, 25 ℃

MARKING

FP46410IC
PXXXXX

CORE LOSSES

P_l max	Test conditions
118 mW/cm³ (4.2 W/set)	100 kHz, 100 mT, 100 ℃

NOTE

Spec. modifications	Previous	Revised
2005-06-22	AL=13900 Min. AL=18533 Nom. A=64.0±0.76 C=50.8±0.81 Losses: General P material	AL=12934 Min. AL=17245 Nom. A=64.01±1.27 C=50.8±1.02 Losses: Detail as indicated

A Division of Spang & Company

Specification for:

FR-46410-IC

110 Delta Drive
Pittsburgh, PA 15238
Phone: 412/696-1333
Fax: 412/696-0333
Email:magnetics@spang.com

DIMENSIONS

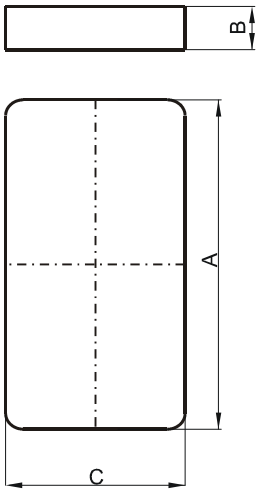

(mm)	Nominal:	Tol. min.:	Tol. max.:
A	64.01	-1.27	+ 1.27
B	5.08	-0.13	+ 0.13
C	50.8	-1.02	+ 1.02
Eff. Parameters (with F_46410EC)			
Ae mm ^{2}	**Amin mm ^{2}**	**le mm**	**Ve mm ^{3}**
511.0	511.0	69.6	35539

INDUCTANCE

AL value (nH)	Test conditions (with FR46410EC)
Nom: 16192 Min.: 12144	10 kHz, < 0.5 mT, 25 ℃

MARKING

FR46410IC
PXXXXX

CORE LOSSES

P_l max	Test conditions
90 mW/cm³ (3.2 W/set)	100 kHz, 100 mT, 100 ℃
647 mW/cm³ (23 W/set)	100 kHz, 200 mT, 100 ℃

NOTE

Spec. modifications	Previous	Revised
2005-06-22	AL=12800 Min. AL=17067 Nom. A=64.0±0.76 C=50.8±0.81 Losses: General R material	AL=12144 Min. AL=16192 Nom. A=64.01±1.27 C=50.8±1.02 Losses: Detail as indicated

A Division of Spang & Company

Specification for:

0P-46527-EC

110 Delta Drive
Pittsburgh, PA 15238
Phone: 412/696-1333
Fax: 412/696-0333
Email:magnetics@spang.com

DIMENSIONS

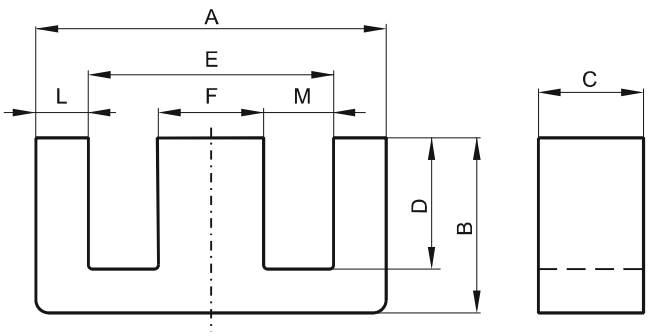

(mm)	Nominal:	Tol. min.:	Tol. max.:
A	65.0	-1.2	+ 1.5
B	32.8	-0.6	0.0
C	27.4	-0.8	0.0
D	22.2	0.0	+ 0.8
E	44.2	0.0	+ 1.8
F	20.0	-0.7	0.0
L	9.95 Ref.		
M	12.72 Ref.		
Eff. Parameters			
Ae mm ^{2}	**Amin mm ^{2}**	**le mm**	**Ve mm ^{3}**
540.0	530.0	147.0	79000

INDUCTANCE

AL value (nH)	Test conditions
Nom: 10642 Min.: 7982	10 kHz, < 0.5 mT, 25 ℃

MARKING

0P46527EC PXXXXX

CORE LOSSES

P_l max	Test conditions
152 mW/cm³ (12 W/set)	100 kHz, 100 mT, 100 ℃

A Division of Spang & Company

Specification for:

0R-46527-EC

110 Delta Drive
Pittsburgh, PA 15238
Phone: 412/696-1333
Fax: 412/696-0333
Email:magnetics@spang.com

DIMENSIONS

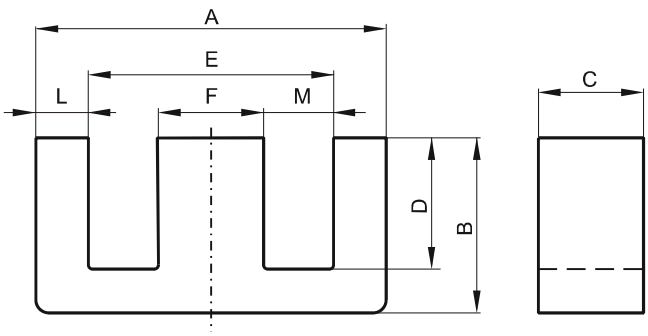

(mm)	Nominal:	Tol. min.:	Tol. max.:
A	65.0	-1.2	+ 1.5
B	32.8	-0.6	0.0
C	27.4	-0.8	0.0
D	22.2	0.0	+ 0.8
E	44.2	0.0	+ 1.8
F	20.0	-0.7	0.0
L	9.95 Ref.		
M	12.72 Ref.		
Eff. Parameters			
Ae mm ^{2}	**Amin mm ^{2}**	**le mm**	**Ve mm ^{3}**
540.0	530.0	147.0	79000

INDUCTANCE

AL value (nH)	Test conditions
Nom: 8600 Min.: 6450	10 kHz, < 0.5 mT, 25 ℃

MARKING

0R46527EC PXXXXX

CORE LOSSES

P_l max	Test conditions
108 mW/cm³ (8.5 W/set)	100 kHz, 100 mT, 100 ℃
595 mW/cm³ (47 W/set)	100 kHz, 200 mT, 100 ℃

A Division of Spang & Company

Specification for:

0P-49316-UC

110 Delta Drive
Pittsburgh, PA 15238
Phone: 412/696-1333
Fax: 412/696-0333
Email:magnetics@spang.com

DIMENSIONS

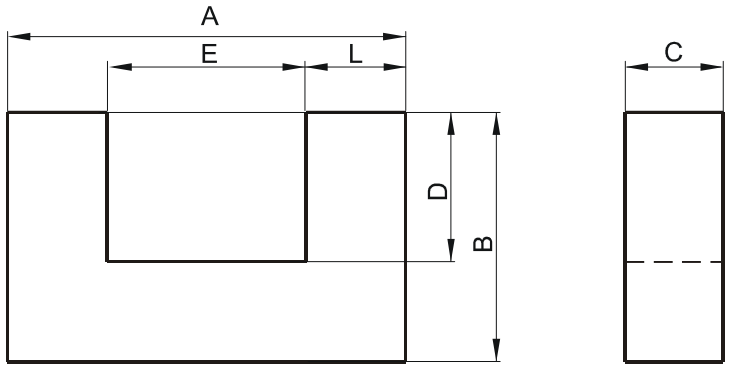

(mm)	Nominal:	Tol. min.:	Tol. max.:
A	93.0	-1.8	+ 1.8
B	76.0	-0.5	+ 0.5
C	16.0	-0.6	+ 0.6
D	48.0	-0.9	+ 0.9
E	36.2	-1.2	+ 1.2
L	28.4 Ref.		
Eff. Parameters			
Ae mm ^{2}	**Amin mm ^{2}**	**le mm**	**Ve mm ^{3}**
447.0	447.0	258.0	115000

INDUCTANCE

AL value (nH)	Test conditions
Nom: 5191 Min.: 3894	10 kHz, < 0.5 mT, 25 ℃

MARKING

P UC

CORE LOSSES

P_l max	Test conditions
183 mW/cm³ (21 W/set)	100 kHz, 100 mT, 100 ℃

A Division of Spang & Company

Specification for:

0R-49316-UC

110 Delta Drive
Pittsburgh, PA 15238
Phone: 412/696-1333
Fax: 412/696-0333
Email:magnetics@spang.com

DIMENSIONS

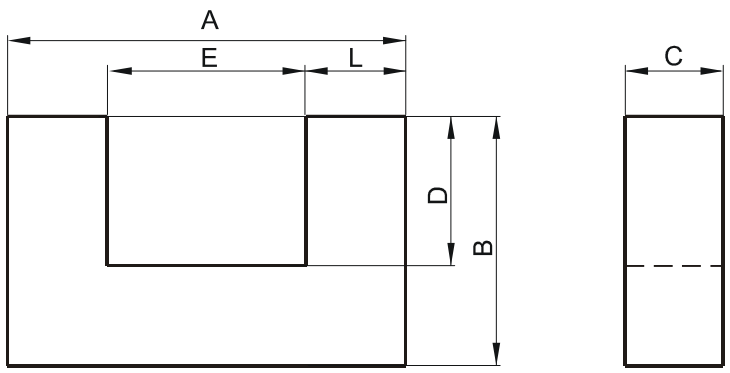

(mm)	Nominal:	Tol. min.:	Tol. max.:
A	93.0	-1.8	+ 1.8
B	76.0	-0.5	+ 0.5
C	16.0	-0.6	+ 0.6
D	48.0	-0.9	+ 0.9
E	36.2	-1.2	+ 1.2
L	28.4 Ref.		
Eff. Parameters			
Ae mm ^{2}	**Amin mm ^{2}**	**le mm**	**Ve mm ^{3}**
447.0	447.0	258.0	115000

INDUCTANCE

AL value (nH)	Test conditions
Nom: 3400 Min.: 2550	10 kHz, < 0.5 mT, 25 ℃

MARKING

R UC

CORE LOSSES

P_l max	Test conditions
148 mW/cm³ (17 W/set)	100 kHz, 100 mT, 100 ℃
800 mW/cm³ (92 W/set)	100 kHz, 200 mT, 100 ℃

A Division of Spang & Company

Specification for:

0R-49925-IC

110 Delta Drive
Pittsburgh, PA 15238
Phone: 412/696-1333
Fax: 412/696-0333
Email:magnetics@spang.com

DIMENSIONS

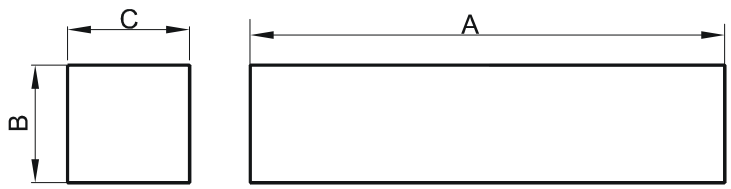

(mm)	Nominal:	Tol. min.:	Tol. max.:
A	101.6	-1.5	+ 1.5
B	25.4	-0.4	+ 0.4
C	25.4	-0.6	+ 0.6
Eff. Parameters			
Ae mm ^{2}	**Amin mm ^{2}**	**le mm**	**Ve mm ^{3}**
645.0	645.0	245.0	158000

INDUCTANCE

AL value (nH)	Test conditions (with 0R49925UC)
Nom: 5707 Min.: 4280	10 kHz, < 0.5 mT, 25 ℃

MARKING

0R49925IC
PXXXXX

CORE LOSSES

P_l max	Test conditions
127 mW/cm³ (20 W/set)	100 kHz, 100 mT, 100 ℃
696 mW/cm³ (110 W/set)	100 kHz, 200 mT, 100 ℃

NOTE

Spec. modifications	Previous	Revised
2005-06-28	Losses: General R material	Losses: Detail as indicated

A Division of Spang & Company

Specification for:

0F-49925-IC

110 Delta Drive
Pittsburgh, PA 15238
Phone: 412/696-1333
Fax: 412/696-0333
Email:magnetics@spang.com

DIMENSIONS

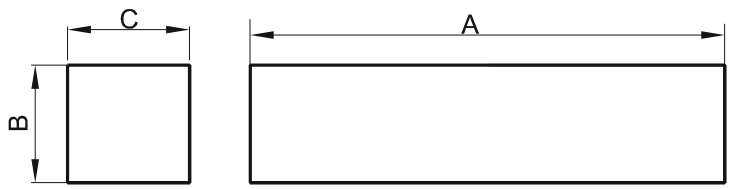

(mm)	Nominal:	Tol. min.:	Tol. max.:
A	101.6	-1.5	+ 1.5
B	25.4	-0.4	+ 0.4
C	25.4	-0.6	+ 0.6
Eff. Parameters			
Ae mm ^{2}	**Amin mm ^{2}**	**le mm**	**Ve mm ^{3}**
645.0	645.0	245.0	158000

INDUCTANCE

AL value (nH)	Test conditions (with 0F49925UC)
7440 ± 25%	10 kHz, < 0.5 mT, 25 ℃

MARKING

No marking

CORE LOSSES

P_l max	Test conditions
228 mW/cm³ (36 W/set)	25 kHz, 200 mT, 100 ℃

NOTE

Spec. modifications	Previous	Revised
2005-06-28	Losses: General F material	Losses: Detail as indicated

MAGNETICS®
A Division of Spang & Company

Specification for:

0P-49925-IC

110 Delta Drive
Pittsburgh, PA 15238
Phone: 412/696-1333
Fax: 412/696-0333
Email:magnetics@spang.com

DIMENSIONS

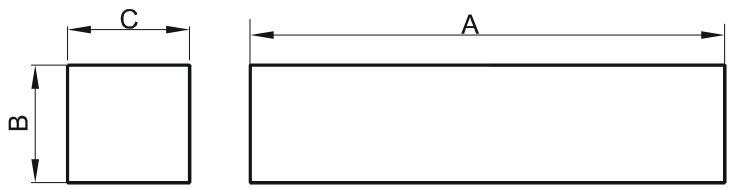

(mm)	Nominal:	Tol. min.:	Tol. max.:
A	101.6	-1.5	+ 1.5
B	25.4	-0.4	+ 0.4
C	25.4	-0.6	+ 0.6
Eff. Parameters			
Ae mm ^{2}	**Amin mm ^{2}**	**le mm**	**Ve mm ^{3}**
645.0	645.0	245.0	158000

INDUCTANCE

AL value (nH)	Test conditions (with 0P49925UC)
Nom: 6200 Min.: 4650	10 kHz, < 0.5 mT, 25 ℃

MARKING

0P49925IC
PXXXXX

CORE LOSSES

P_l max	Test conditions
158 mW/cm³ (25 W/set)	100 kHz, 100 mT, 100 ℃

NOTE

Spec. modifications	Previous	Revised
2005-06-28	Losses: General P material	Losses: Detail as indicated

A Division of Spang & Company

Specification for:

0F-49938-EC

110 Delta Drive
Pittsburgh, PA 15238
Phone: 412/696-1333
Fax: 412/696-0333
Email:magnetics@spang.com

DIMENSIONS

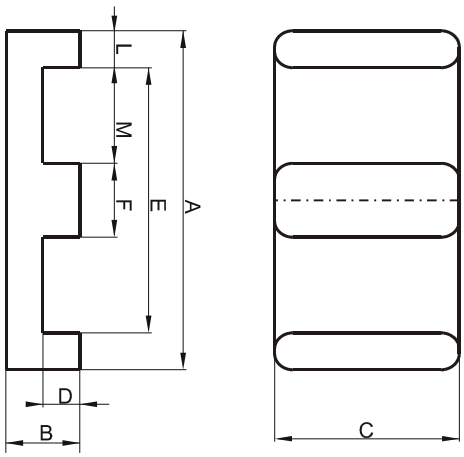

(mm)	Nominal:	Tol. min.:	Tol. max.:
A	102.0	-1.0	+ 1.0
B	20.3	-0.25	+ 0.25
C	37.5	-0.4	+ 0.4
D	13.3	-0.25	+ 0.25
E	86.0	-1.0	+ 1.0
F	14.0	-0.25	+ 0.25
L	8.0 Ref.		
M	36.0 Ref.		
Eff. Parameters			
Ae mm ^{2}	**Amin mm ^{2}**	**le mm**	**Ve mm ^{3}**
540	525	148	79800

INDUCTANCE

AL value (nH)	Test conditions
11697 ± 25%	10 kHz, < 0.5 mT, 25 ℃

MARKING

0F49938EC
PXXXXX

CORE LOSSES

P_l max	Test conditions
213 mW/cm³ (17 W/set)	25 kHz, 200 mT, 100 ℃

NOTE

Spec. modifications	Previous	Revised
2005-06-22	AL=11000±25% L=8.0±0.25 M=35.94±0.51 Losses: General F material	AL=11697±25% L=8.0 Ref. M=36.0 Ref. Losses: Detail as indicated

A Division of Spang & Company

Specification for:

CP-41434-IC

110 Delta Drive
Pittsburgh, PA 15238
Phone: 412/696-1333
Fax: 412/696-0333
Email:magnetics@spang.com

DIMENSIONS

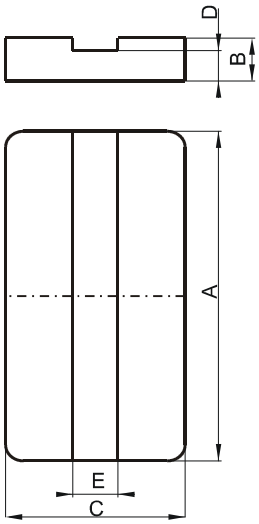

(mm)	Nominal:	Tol. min.:	Tol. max.:
A	14.0	-0.3	+ 0.3
B	1.8	-0.05	+ 0.05
C	5.0	-0.15	+ 0.15
D	1.5	-0.1	+ 0.1
E	2.5	0.0	+ 0.2
Eff. Parameters (with C_41434EC)			
Ae mm ^{2}	**Amin mm ^{2}**	**le mm**	**Ve mm ^{3}**
14.2	11.4	16.4	230

INDUCTANCE

AL value (nH)	Test conditions (with CP41434EC)
Nom: 1580 Min.: 1185	10 kHz, < 0.5 mT, 25 ℃

MARKING

P
IC

CORE LOSSES

P_l max	Test conditions
106 mW/cm³ (0.026 W/set)	100 kHz, 100 mT, 100 ℃

NOTE

Spec. modifications	Previous	Revised
2005-06-22	Al=1480 Min. Losses: General P material	Al=1185 Min. Losses: Detail as indicated

MAGNETICS®
A Division of Spang & Company

Specification for:

CP-41805-EC

110 Delta Drive
Pittsburgh, PA 15238
Phone: 412/696-1333
Fax: 412/696-0333
Email:magnetics@spang.com

DIMENSIONS

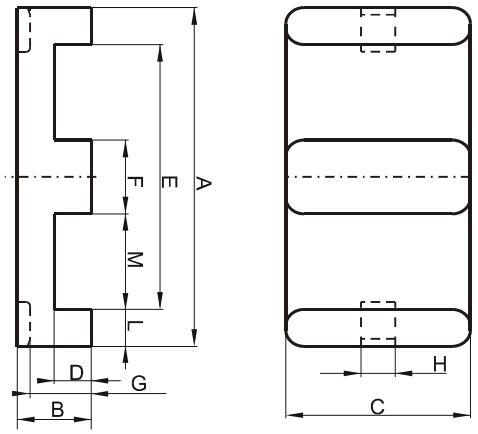

(mm)	Nominal:	Tol. min.:	Tol. max.:
A	18.0	-0.35	+ 0.35
B	4.0	-0.1	+ 0.1
C	10.0	-0.2	+ 0.2
D	2.0	-0.1	+ 0.1
E	14.0	-0.3	+ 0.3
F	4.0	-0.1	+ 0.1
G	3.3	-0.15	+ 0.15
H	2.5	0.0	+ 0.2
L	2.0		
M	5.0		
Eff. Parameters			
Ae mm ^{2}	**Amin mm ^{2}**	**le mm**	**Ve mm ^{3}**
40.1	39.9	24.2	972

INDUCTANCE

AL value (nH)	Test conditions
Nom: 3430 Min.: 2573	10 kHz, < 0.5 mT, 25 ℃

MARKING

P
EC

CORE LOSSES

P_l max	Test conditions
108 mW/cm³ (0.105 W/set)	100 kHz, 100 mT, 100 ℃

NOTE

Spec. modifications	Previous	Revised
2005-06-16	AL=2740 Min. B=4.09 Max. F=4.09 Max. L=2.0±0.1 M=5.0±015 Losses: General P material	AL=2573 Min. B=4.1 Max. F=4.1 Max. L=2.0 Ref. M=5.0 Ref. Losses: Detail as indicated

A Division of Spang & Company

Specification for:

CF-41805-EC

110 Delta Drive
Pittsburgh, PA 15238
Phone: 412/696-1333
Fax: 412/696-0333
Email:magnetics@spang.com

DIMENSIONS

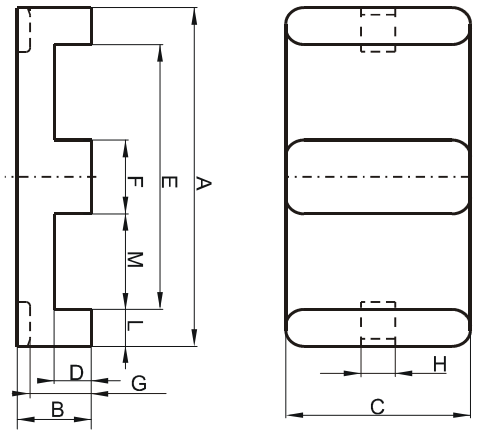

(mm)	Nominal:	Tol. min.:	Tol. max.:
A	18.0	-0.35	+ 0.35
B	4.0	-0.1	+ 0.1
C	10.0	-0.2	+ 0.2
D	2.0	-0.1	+ 0.1
E	14.0	-0.3	+ 0.3
F	4.0	-0.1	+ 0.1
G	3.3	-0.15	+ 0.15
H	2.5	0.0	+ 0.2
L	2.0		
M	5.0		
Eff. Parameters			
Ae mm ^{2}	**Amin mm ^{2}**	**le mm**	**Ve mm ^{3}**
40.1	39.9	24.2	972

INDUCTANCE

AL value (nH)	Test conditions
3853 ± 25%	10 kHz, < 0.5 mT, 25 ℃

MARKING

F
EC

CORE LOSSES

P_l max	Test conditions
206 mW/cm³ (0.20 W/set)	25 kHz, 200 mT, 100 ℃

NOTE

Spec. modifications	Previous	Revised
2005-06-16	Al=4380±25% B=4.09 Max. F=4.09 Max. L=2.0±0.1 M=5.0±015 Losses: General F material	Al=3853±25% B=4.1 Max. F=4.1 Max. L=2.0 Ref. M=5.0 Ref. Losses: Detail as indicated

A Division of Spang & Company

Specification for:

CF-41805-IC

110 Delta Drive
Pittsburgh, PA 15238
Phone: 412/696-1333
Fax: 412/696-0333
Email:magnetics@spang.com

DIMENSIONS

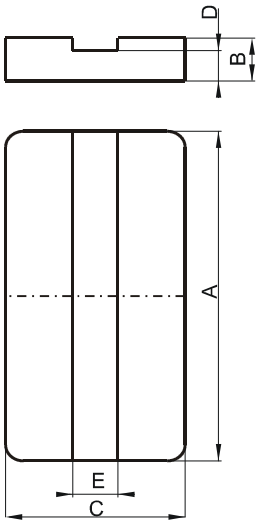

(mm)	Nominal:	Tol. min.:	Tol. max.:
A	18.0	-0.35	+ 0.35
B	2.4	-0.05	+ 0.05
C	10.0	-0.2	+ 0.2
D	2.0	-0.1	+ 0.1
E	2.5	0.0	+ 0.2
Eff. Parameters (with C_41805EC)			
Ae mm ^{2}	**Amin mm ^{2}**	**le mm**	**Ve mm ^{3}**
39.5	35.9	20.3	830

INDUCTANCE

AL value (nH)	Test conditions (with CF41805EC)
4241 ± 25%	10 kHz, < 0.5 mT, 25 ℃

MARKING

F
IC

CORE LOSSES

P_l max	Test conditions
205 mW/cm³ (0.17 W/set)	25 kHz, 200 mT, 100 ℃

NOTE

Spec. modifications	Previous	Revised
2005-06-16	Losses: General F material	Losses: Detail as indicated

A Division of Spang & Company

Specification for:

CF-42216-EC

110 Delta Drive
Pittsburgh, PA 15238
Phone: 412/696-1333
Fax: 412/696-0333
Email:magnetics@spang.com

DIMENSIONS

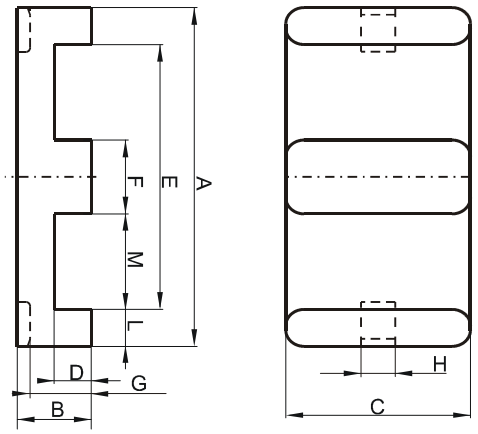

(mm)	Nominal:	Tol. min.:	Tol. max.:
A	21.8	-0.4	+ 0.4
B	5.7	-0.1	+ 0.1
C	15.8	-0.3	+ 0.3
D	3.2	-0.1	+ 0.1
E	16.8	-0.4	+ 0.4
F	5.0	-0.1	+ 0.1
G	4.68	-0.15	+ 0.15
H	2.8	0.0	+ 0.2
L	2.5 Ref.		
M	5.9 Ref.		
Eff. Parameters			
Ae mm ^{2}	**Amin mm ^{2}**	**le mm**	**Ve mm ^{3}**
76.0	73.1	32.3	2451

INDUCTANCE

AL value (nH)	Test conditions
6131 ± 25%	10 kHz, < 0.5 mT, 25 ℃

MARKING

F
EC

CORE LOSSES

P_l max	Test conditions
208 mW/cm³ (0.51 W/set)	25 kHz, 200 mT, 100 ℃

NOTE

Spec. modifications	Previous	Revised
2005-06-22	AL=6250±25% A=21.6±0.26 C=15.6 Min. L=2.54±0.31 M=5.72±0.31 Losses: General F material	AL=6131±25% A=21.8±0.4 C=15.5 Min. L=2.5 Ref. M=5.9 Ref. Losses: Detail as indicated

A Division of Spang & Company

Specification for:

CR-42216-IC

110 Delta Drive
Pittsburgh, PA 15238
Phone: 412/696-1333
Fax: 412/696-0333
Email:magnetics@spang.com

DIMENSIONS

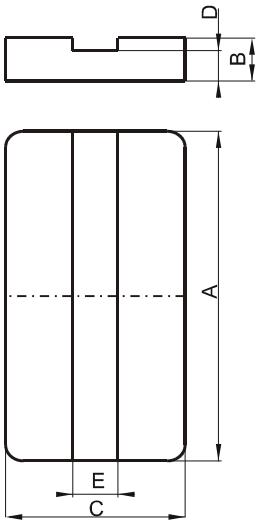

(mm)	Nominal:	Tol. min.:	Tol. max.:
A	21.8	-0.4	+ 0.4
B	2.9	-0.05	+ 0.05
C	15.8	-0.3	+ 0.3
D	2.5	-0.1	+ 0.1
E	2.9	0.0	+ 0.2
Eff. Parameters (with C_42216EC)			
Ae mm ^{2}	**Amin mm ^{2}**	**le mm**	**Ve mm ^{3}**
80.4	72.5	26.1	2100

INDUCTANCE

AL value (nH)	Test conditions (with CR42216EC)
Nom: 6147 Min.: 4610	10 kHz, < 0.5 mT, 25 ℃

MARKING

R
IC

CORE LOSSES

P_l max	Test conditions
86 mW/cm³ (0.18 W/set)	100 kHz, 100 mT, 100 ℃
595 mW/cm³ (1.25 W/set)	100 kHz, 200 mT, 100 ℃

NOTE

Spec. modifications	Previous	Revised
2005-06-22	A=21.6±0.26 C=15.62 Min. Losses: General R material	A=21.8±0.4 C=15.5 Min. Losses: Detail as indicated

A Division of Spang & Company

Specification for:

CP-42216-IC

110 Delta Drive
Pittsburgh, PA 15238
Phone: 412/696-1333
Fax: 412/696-0333
Email:magnetics@spang.com

DIMENSIONS

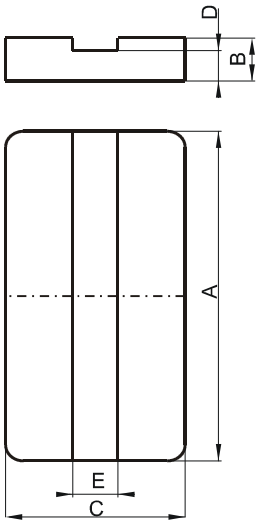

(mm)	Nominal:	Tol. min.:	Tol. max.:
A	21.8	-0.4	+ 0.4
B	2.9	-0.05	+ 0.05
C	15.8	-0.3	+ 0.3
D	2.5	-0.1	+ 0.1
E	2.9	0.0	+ 0.2
Eff. Parameters (with C_42216EC)			
Ae mm ^{2}	**Amin mm ^{2}**	**le mm**	**Ve mm ^{3}**
80.4	72.5	26.1	2100

INDUCTANCE

AL value (nH)	Test conditions (with CP42216EC)
Nom: 6506 Min.: 4880	10 kHz, < 0.5 mT, 25 ℃

MARKING

P
IC

CORE LOSSES

P_l max	Test conditions
110 mW/cm³ (0.23 W/set)	100 kHz, 100 mT, 100 ℃

NOTE

Spec. modifications	Previous	Revised
2005-06-22	A=21.6±0.26 C=15.62 Min. Losses: General P material	A=21.8±0.4 C=15.5 Min. Losses: Detail as indicated

A Division of Spang & Company

Specification for:

CF-42216-IC

110 Delta Drive
Pittsburgh, PA 15238
Phone: 412/696-1333
Fax: 412/696-0333
Email:magnetics@spang.com

DIMENSIONS

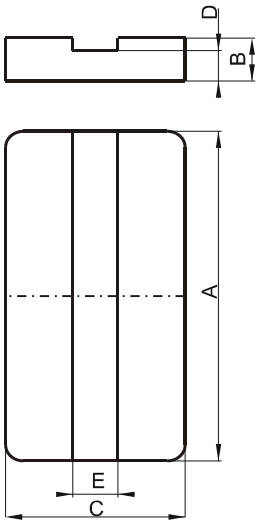

(mm)	Nominal:	Tol. min.:	Tol. max.:
A	21.8	-0.4	+ 0.4
B	2.9	-0.05	+ 0.05
C	15.8	-0.3	+ 0.3
D	2.5	-0.1	+ 0.1
E	2.9	0.0	+ 0.2
Eff. Parameters (with C_42216EC)			
Ae mm ^{2}	**Amin mm ^{2}**	**le mm**	**Ve mm ^{3}**
80.4	72.5	26.1	2100

INDUCTANCE

AL value (nH)	Test conditions (with CF42216EC)
7327 ± 25%	10 kHz, < 0.5 mT, 25 ℃

MARKING

F
IC

CORE LOSSES

P_l max	Test conditions
205 mW/cm³ (0.43 W/set)	25 kHz, 200 mT, 100 ℃

NOTE

Spec. modifications	Previous	Revised
2005-06-22	AL=7776±25% A=21.6±0.26 C=15.62 Min. Losses: General F material	AL=7327±25% A=21.8±0.4 C=15.5 Min. Losses: Detail as indicated

A Division of Spang & Company

Specification for:

CF-45810-EC

110 Delta Drive
Pittsburgh, PA 15238
Phone: 412/696-1333
Fax: 412/696-0333
Email:magnetics@spang.com

DIMENSIONS

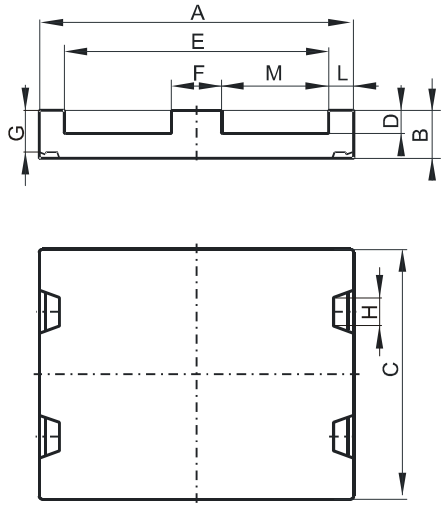

(mm)	Nominal:	Tol. min.:	Tol. max.:
A	58.42	-1.2	+ 1.2
B	10.54	-0.2	+ 0.2
C	38.1	-0.8	+ 0.8
D	6.35 Min.		
E	50.0 Min.		
F	8.1	-0.2	+ 0.2
L	3.7 Ref.		
M	21.4 Ref.		
Eff. Parameters			
Ae mm ^{2}	**Amin mm ^{2}**	**le mm**	**Ve mm ^{3}**
308	308	80.6	24600

INDUCTANCE

AL value (nH)	Test conditions
10427 ± 25%	10 kHz, < 0.5 mT, 25 ℃

MARKING

CF45810EC
PXXXXX

CORE LOSSES

P_l max	Test conditions
207 mW/cm³ (5.1 W/set)	25 kHz, 200 mT, 100 ℃

NOTE

Spec. modifications	Previous	Revised
2005-06-22	AL=10500±25% E=50.39 Min. Losses: General F material	AL=10427±25% E=50.0 Min. Losses: Detail as indicated

MAGNETICS®
A Division of Spang & Company

Specification for:

CR-45810-EC

110 Delta Drive
Pittsburgh, PA 15238
Phone: 412/696-1333
Fax: 412/696-0333
Email:magnetics@spang.com

DIMENSIONS

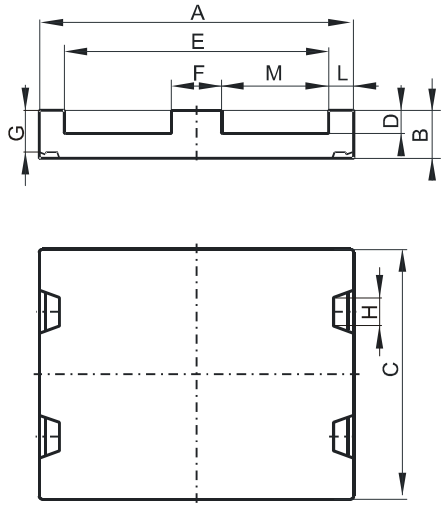

(mm)	Nominal:	Tol. min.:	Tol. max.:
A	58.42	-1.2	+ 1.2
B	10.54	-0.2	+ 0.2
C	38.1	-0.8	+ 0.8
D	6.35 Min.		
E	50.0 Min.		
F	8.1	-0.2	+ 0.2
L	3.7 Ref.		
M	21.4 Ref.		
Eff. Parameters			
Ae mm ^{2}	**Amin mm ^{2}**	**le mm**	**Ve mm ^{3}**
308	308	80.6	24600

INDUCTANCE

AL value (nH)	Test conditions
Nom: 8498 Min.: 6374	10 kHz, < 0.5 mT, 25 ℃

MARKING

CR45810EC
PXXXXX

CORE LOSSES

P_l max	Test conditions
98 mW/cm³ (2.4 W/set)	100 kHz, 100 mT, 100 ℃
609 mW/cm³ (15 W/set)	100 kHz, 200 mT, 100 ℃

NOTE

Spec. modifications	Previous	Revised
2005-06-22	E=50.39 Min. Losses: General R material	E=50.0 Min. Losses: Detail as indicated

A Division of Spang & Company

Specification for:

CP-45810-EC

110 Delta Drive
Pittsburgh, PA 15238
Phone: 412/696-1333
Fax: 412/696-0333
Email:magnetics@spang.com

DIMENSIONS

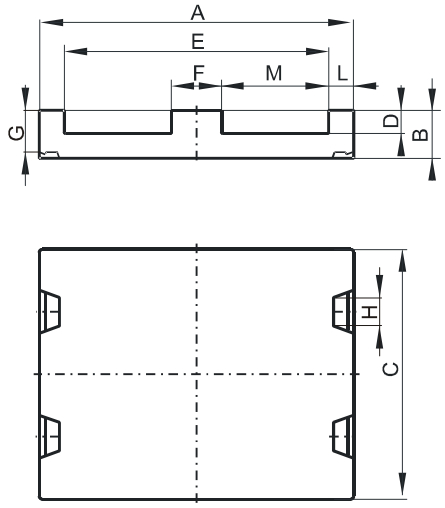

(mm)	Nominal:	Tol. min.:	Tol. max.:
A	58.42	-1.2	+ 1.2
B	10.54	-0.2	+ 0.2
C	38.1	-0.8	+ 0.8
D	6.35 Min.		
E	50.0 Min.		
F	8.1	-0.2	+ 0.2
L	3.7 Ref.		
M	21.4 Ref.		
Eff. Parameters			
Ae mm ^{2}	**Amin mm ^{2}**	**le mm**	**Ve mm ^{3}**
308	308	80.6	24600

INDUCTANCE

AL value (nH)	Test conditions
Nom: 9073 Min.: 6805	10 kHz, < 0.5 mT, 25 ℃

MARKING

CP45810EC
PXXXXX

CORE LOSSES

P_l max	Test conditions
122 mW/cm³ (3 W/set)	100 kHz, 100 mT, 100 ℃

NOTE

Spec. modifications	Previous	Revised
2005-06-22	E=50.39 Min. Losses: General P material	E=50.0 Min. Losses: Detail as indicated

A Division of Spang & Company

Specification for:

CR-45810-IC

110 Delta Drive
Pittsburgh, PA 15238
Phone: 412/696-1333
Fax: 412/696-0333
Email:magnetics@spang.com

DIMENSIONS

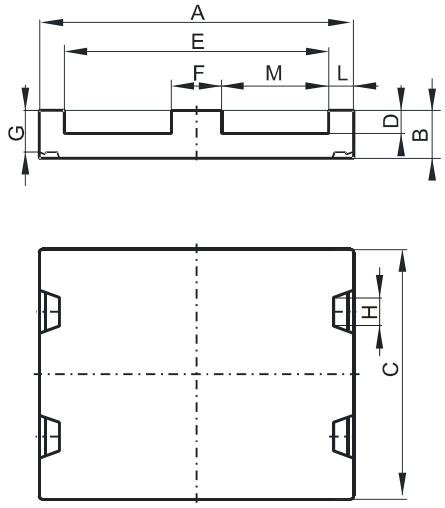

(mm)	Nominal:	Tol. min.:	Tol. max.:
A	58.42	-1.2	+ 1.2
B	4.1	-0.12	+ 0.12
C	38.1	-0.8	+ 0.8
Eff. Parameters (with C_45810EC)			
Ae mm ^{2}	**Amin mm ^{2}**	**le mm**	**Ve mm ^{3}**
310	310	67.7	20800

INDUCTANCE

AL value (nH)	Test conditions (with CR45810EC)
Nom: 9821 Min.: 7366	10 kHz, < 0.5 mT, 25 ℃

MARKING

CR45810IC
PXXXXX

CORE LOSSES

P_l max	Test conditions
97 mW/cm³ (2.0 W/set)	100 kHz, 100 mT, 100 ℃
625 mW/cm³ (13 W/set)	100 kHz, 200 mT, 100 ℃

NOTE

Spec. modifications	Previous	Revised
2005-06-22	B=4.04±0.12 Losses: General R material	B=4.1±0.12 Losses: Detail as indicated

A Division of Spang & Company

Specification for:

CF-45810-IC

110 Delta Drive
Pittsburgh, PA 15238
Phone: 412/696-1333
Fax: 412/696-0333
Email:magnetics@spang.com

DIMENSIONS

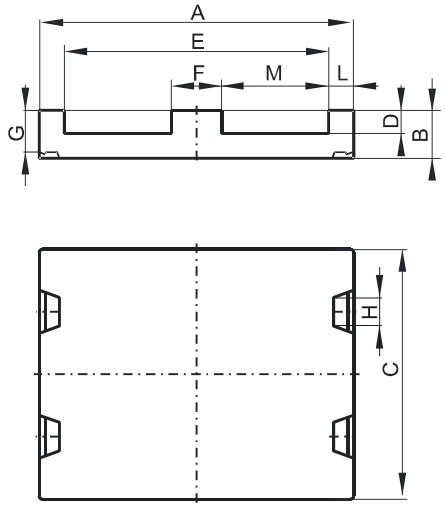

(mm)	Nominal:	Tol. min.:	Tol. max.:
A	58.42	-1.2	+ 1.2
B	4.1	-0.12	+ 0.12
C	38.1	-0.8	+ 0.8
Eff. Parameters (with C_45810EC)			
Ae mm ^{2}	**Amin mm ^{2}**	**le mm**	**Ve mm ^{3}**
310	310	67.7	20800

INDUCTANCE

AL value (nH)	Test conditions (with CF45810EC)
11941 ± 25%	10 kHz, < 0.5 mT, 25 ℃

MARKING

CF45810IC
PXXXXX

CORE LOSSES

P_l max	Test conditions
203 mW/cm³ (4.2 W/set)	25 kHz, 200 mT, 100 ℃

NOTE

Spec. modifications	Previous	Revised
2005-06-22	B=4.04±0.12 Losses: General F material	B=4.1±0.12 Losses: Detail as indicated

A Division of Spang & Company

Specification for:

CP-45810-IC

110 Delta Drive
Pittsburgh, PA 15238
Phone: 412/696-1333
Fax: 412/696-0333
Email:magnetics@spang.com

DIMENSIONS

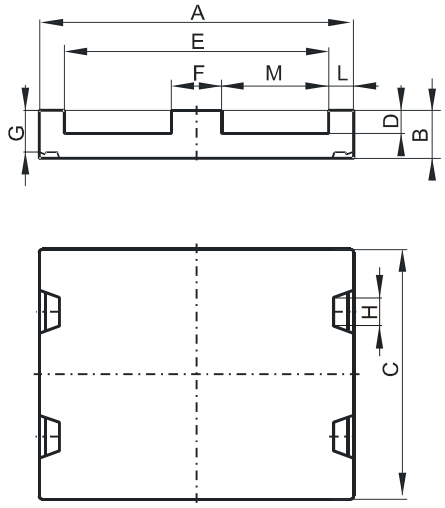

(mm)	Nominal:	Tol. min.:	Tol. max.:
A	58.42	-1.2	+ 1.2
B	4.1	-0.12	+ 0.12
C	38.1	-0.8	+ 0.8
Eff. Parameters (with C_45810EC)			
Ae mm ^{2}	**Amin mm ^{2}**	**le mm**	**Ve mm ^{3}**
310	310	67.7	20800

INDUCTANCE

AL value (nH)	Test conditions (with CP45810EC)
Nom: 10457 Min.: 7843	10 kHz, < 0.5 mT, 25 ℃

MARKING

CP45810IC
PXXXXX

CORE LOSSES

P_l max	Test conditions
145 mW/cm³ (3 W/set)	100 kHz, 100 mT, 100 ℃

NOTE

Spec. modifications	Previous	Revised
2005-06-22	B=4.04±0.12 Losses: General P material	B=4.1±0.12 Losses: Detail as indicated

MAGNETICS®
A Division of Spang & Company

Specification for:

CR-46410-EC

110 Delta Drive
Pittsburgh, PA 15238
Phone: 412/696-1333
Fax: 412/696-0333
Email:magnetics@spang.com

DIMENSIONS

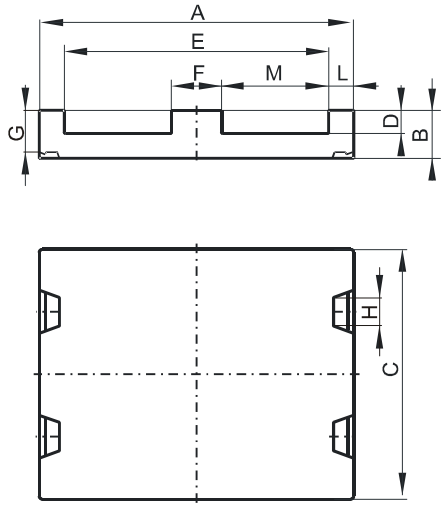

(mm)	Nominal:	Tol. min.:	Tol. max.:
A	64.0	-0.76	+ 0.76
B	10.2	-0.1	+ 0.1
C	50.8	-0.81	+ 0.81
D	5.03 Min.		
E	53.16 Min.		
F	10.16	-0.18	+ 0.18
G	8.86 Ref.		
H	5.15 Ref.		
L	5.08	-0.12	+ 0.12
M	21.8	-0.25	+ 0.25
Eff. Parameters			
Ae mm ^{2}	**Amin mm ^{2}**	**le mm**	**Ve mm ^{3}**
516.0	516.0	80.2	41400

INDUCTANCE

AL value (nH)	Test conditions
Nom: 14618 Min.: 10964	10 kHz, < 0.5 mT, 25 ℃

MARKING

CR46410EC
PXXXXX

CORE LOSSES

P_l max	Test conditions
87 mW/cm³ (3.6 W/set)	100 kHz, 100 mT, 100 ℃
614 mW/cm³ (25 W/set)	100 kHz, 200 mT, 100 ℃

NOTE

Spec. modifications	Previous	Revised
2005-06-22	AL=11100 Min. AL=14800 Nom. M=21.59 Min. Losses: General R material	AL=10964 Min. AL=14618 Nom. M=21.55 Min. Losses: Detail as indicated

A Division of Spang & Company

Specification for:

CP-46410-EC

110 Delta Drive
Pittsburgh, PA 15238
Phone: 412/696-1333
Fax: 412/696-0333
Email:magnetics@spang.com

DIMENSIONS

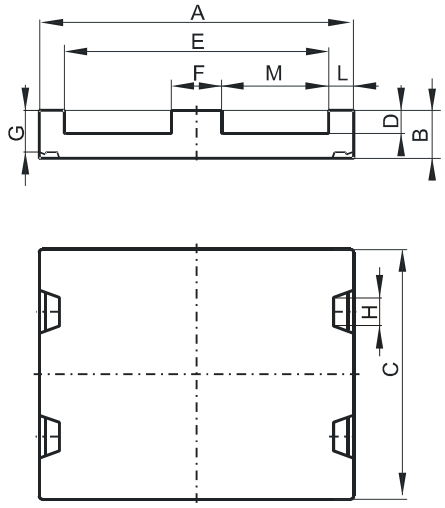

(mm)	Nominal:	Tol. min.:	Tol. max.:
A	64.0	-0.76	+ 0.76
B	10.2	-0.1	+ 0.1
C	50.8	-0.81	+ 0.81
D	5.03 Min.		
E	53.16 Min.		
F	10.16	-0.18	+ 0.18
G	8.86 Ref.		
H	5.15 Ref.		
L	5.08	-0.12	+ 0.12
M	21.8	-0.25	+ 0.25
Eff. Parameters			
Ae mm ^{2}	**Amin mm ^{2}**	**le mm**	**Ve mm ^{3}**
516.0	516.0	80.2	41400

INDUCTANCE

AL value (nH)	Test conditions
Nom: 15599 Min.: 11699	10 kHz, < 0.5 mT, 25 ℃

MARKING

CP46410EC
PXXXXX

CORE LOSSES

P_l max	Test conditions
116 mW/cm³ (4.8 W/set)	100 kHz, 100 mT, 100 ℃

NOTE

Spec. modifications	Previous	Revised
2005-06-22	AL=12100 Min. AL=16133 Nom. M=21.59 Min. Losses: General P material	AL=11699 Min. AL=15599 Nom. M=21.55 Min. Losses: Detail as indicated

A Division of Spang & Company

Specification for:

CF-46410-EC

110 Delta Drive
Pittsburgh, PA 15238
Phone: 412/696-1333
Fax: 412/696-0333
Email:magnetics@spang.com

DIMENSIONS

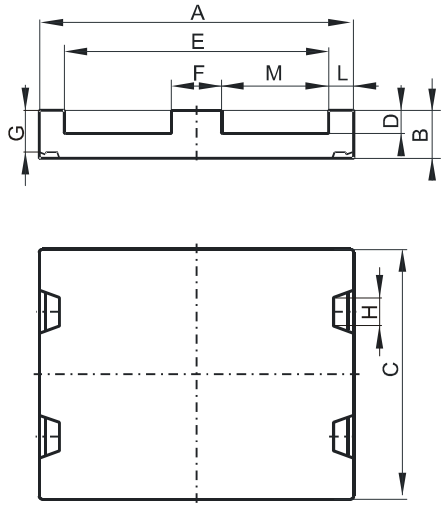

(mm)	Nominal:	Tol. min.:	Tol. max.:
A	64.0	-0.76	+ 0.76
B	10.2	-0.1	+ 0.1
C	50.8	-0.81	+ 0.81
D	5.03 Min.		
E	53.16 Min.		
F	10.16	-0.18	+ 0.18
G	8.86 Ref.		
H	5.15 Ref.		
L	5.08	-0.12	+ 0.12
M	21.8	-0.25	+ 0.25
Eff. Parameters			
Ae mm ^{2}	**Amin mm ^{2}**	**le mm**	**Ve mm ^{3}**
516.0	516.0	80.2	41400

INDUCTANCE

AL value (nH)	Test conditions
17901 ± 25%	10 kHz, < 0.5 mT, 25 ℃

MARKING

CF46410EC
PXXXXX

CORE LOSSES

P_l max	Test conditions
205 mW/cm³ (8.5 W/set)	25 kHz, 200 mT, 100 ℃

NOTE

Spec. modifications	Previous	Revised
2005-06-22	AL=19400±25% M=21.59 Min. Losses: General F material	AL=17901±25% M=21.55 Min. Losses: Detail as indicated

A Division of Spang & Company

Specification for:

CF-46410-IC

110 Delta Drive
Pittsburgh, PA 15238
Phone: 412/696-1333
Fax: 412/696-0333
Email:magnetics@spang.com

DIMENSIONS

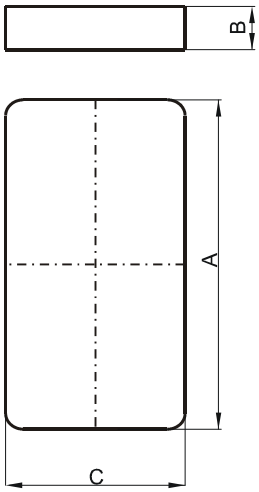

(mm)	Nominal:	Tol. min.:	Tol. max.:
A	64.01	-1.27	+ 1.27
B	5.08	-0.13	+ 0.13
C	50.8	-1.02	+ 1.02
Eff. Parameters (with C_46410EC)			
Ae mm ^{2}	**Amin mm ^{2}**	**le mm**	**Ve mm ^{3}**
511.0	511.0	69.9	35539

INDUCTANCE

AL value (nH)	Test conditions (with CF46410EC)
19639 ± 25%	10 kHz, < 0.5 mT, 25 ℃

MARKING

CF46410IC
PXXXXX

CORE LOSSES

P_l max	Test conditions
205 mW/cm³ (7.4 W/set)	25 kHz, 200 mT, 100 ℃

NOTE

Spec. modifications	Previous	Revised
2005-06-22	A=64.0±0.76 C=50.8±0.81 Losses: General F material	A=64.01±1.27 C=50.8±1.02 Losses: Detail as indicated

A Division of Spang & Company

Specification for:

CP-46410-IC

110 Delta Drive
Pittsburgh, PA 15238
Phone: 412/696-1333
Fax: 412/696-0333
Email:magnetics@spang.com

DIMENSIONS

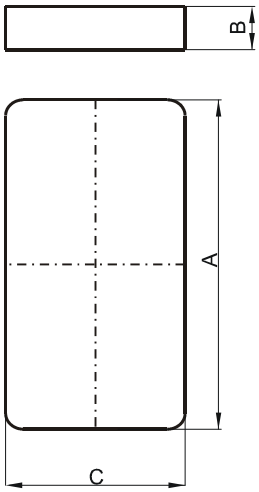

(mm)	Nominal:	Tol. min.:	Tol. max.:
A	64.01	-1.27	+ 1.27
B	5.08	-0.13	+ 0.13
C	50.8	-1.02	+ 1.02
Eff. Parameters (with C_46410EC)			
Ae mm ^{2}	**Amin mm ^{2}**	**le mm**	**Ve mm ^{3}**
511.0	511.0	69.9	35539

INDUCTANCE

AL value (nH)	Test conditions (with CP46410EC)
Nom: 17189 Min.: 12892	10 kHz, < 0.5 mT, 25 ℃

MARKING

CP46410IC
PXXXXX

CORE LOSSES

P_l max	Test conditions
116 mW/cm³ (4.2 W/set)	100 kHz, 100 mT, 100 ℃

NOTE

Spec. modifications	Previous	Revised
2005-06-22	AL=13900 Min. AL=18533 Nom. A=64.0±0.76 C=50.8±0.81 Losses: General P material	AL=12892 Min. AL=17189 Nom. A=64.01±1.27 C=50.8±1.02 Losses: Detail as indicated

MAGNETICS®
A Division of Spang & Company

Specification for:

CR-46410-IC

110 Delta Drive
Pittsburgh, PA 15238
Phone: 412/696-1333
Fax: 412/696-0333
Email:magnetics@spang.com

DIMENSIONS

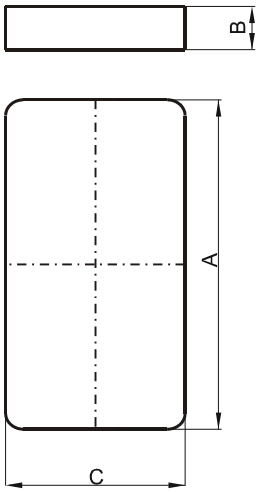

(mm)	Nominal:	Tol. min.:	Tol. max.:
A	64.01	-1.27	+ 1.27
B	5.08	-0.13	+ 0.13
C	50.8	-1.02	+ 1.02
Eff. Parameters (with C_46410EC)			
Ae mm ^{2}	**Amin mm ^{2}**	**le mm**	**Ve mm ^{3}**
511.0	511.0	69.9	35539

INDUCTANCE

AL value (nH)	Test conditions (with CR46410EC)
Nom: 16139 Min.: 12104	10 kHz, < 0.5 mT, 25 ℃

MARKING

CR46410IC
PXXXXX

CORE LOSSES

P_l max	Test conditions
89 mW/cm³ (3.2 W/set)	100 kHz, 100 mT, 100 ℃
637 mW/cm³ (23 W/set)	100 kHz, 200 mT, 100 ℃

NOTE

Spec. modifications	Previous	Revised
2005-06-22	AL=12800 Min. AL=17067 Nom. A=64.0±0.76 C=50.8±0.81 Losses: General R material	AL=12104 Min. AL=16139 Nom. A=64.01±1.27 C=50.8±1.02 Losses: Detail as indicated

A Division of Spang & Company

Specification for:

DF-41408-UG

110 Delta Drive
Pittsburgh, PA 15238
Phone: 412/696-1333
Fax: 412/696-0333
Email:magnetics@spang.com

DIMENSIONS

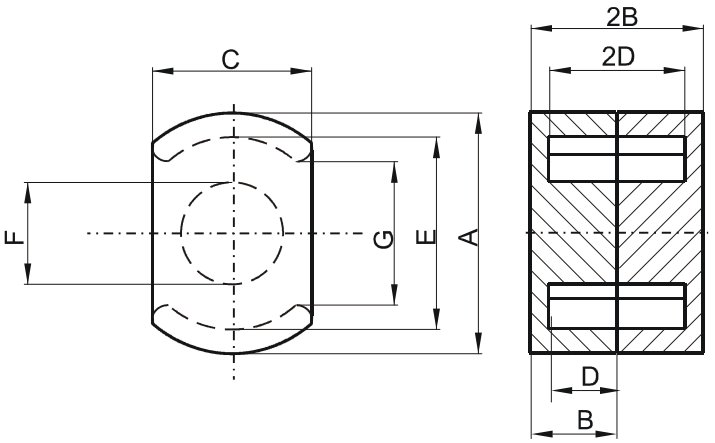

(mm)	Nominal:	Tol. min.:	Tol. max.:
A	14.05	-0.25	+ 0.25
B	4.15	-0.08	+ 0.08
2B	8.3	-0.15	+ 0.15
C	9.4	-0.15	+ 0.15
D	2.9	-0.1	+ 0.1
2D	5.8	-0.2	+ 0.2
E	11.8	-0.2	+ 0.2
F	5.9	-0.1	+ 0.1
G	7.6 Min.		
Eff. Parameters			
Ae mm ^{2}	**Amin mm ^{2}**	**le mm**	**Ve mm ^{3}**
24.6	23.5	22.6	556

INDUCTANCE

AL value (nH)	Test conditions
2474 ± 25%	10 kHz, < 0.5 mT, 25 ℃

MARKING

No marking

CORE LOSSES

P_l max	Test conditions
234 mW/cm³ (0.13 W/set)	25 kHz, 200 mT, 100 ℃

NOTE

Spec. modifications	Previous	Revised
2005-06-22	B=4.11 Min. 2B=8.20 Min. G=7.62 Min. Losses: General F material	B=4.07 Min. 2B=8.15 Min. G= 7.6 Min. Losses: Detail as indicated

A Division of Spang & Company

Specification for:

DJ-41408-UG

110 Delta Drive
Pittsburgh, PA 15238
Phone: 412/696-1333
Fax: 412/696-0333
Email:magnetics@spang.com

DIMENSIONS

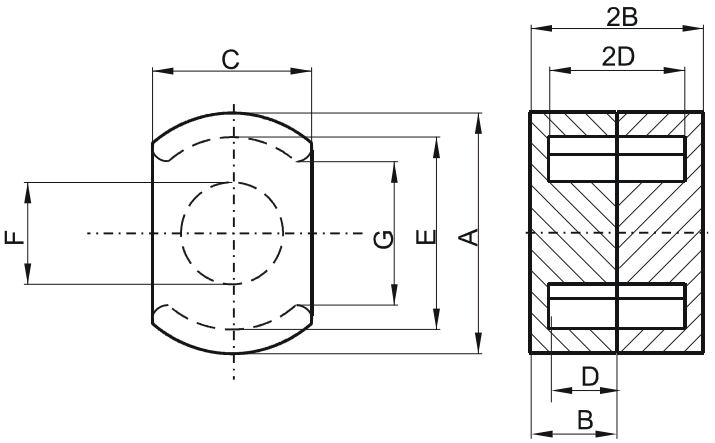

(mm)	Nominal:	Tol. min.:	Tol. max.:
A	14.05	-0.25	+ 0.25
B	4.15	-0.08	+ 0.08
2B	8.3	-0.15	+ 0.15
C	9.4	-0.15	+ 0.15
D	2.9	-0.1	+ 0.1
2D	5.8	-0.2	+ 0.2
E	11.8	-0.2	+ 0.2
F	5.9	-0.1	+ 0.1
G	7.6 Min.		
Eff. Parameters			
Ae mm ^{2}	**Amin mm ^{2}**	**le mm**	**Ve mm ^{3}**
24.6	23.5	22.6	556

INDUCTANCE

AL value (nH)	Test conditions
Nom: 3260 Min.: 2445	10 kHz, < 0.5 mT, 25 ℃

MARKING

No marking

LOSS FACTOR

tan δ/μ (x10^{-6})	Test conditions
< 15	100 kHz, < 0.25 mT, 25 ℃

NOTE

Spec. modifications	Previous	Revised
2005-06-22	Al=3250 Min. B=4.11 Min. 2B=8.20 Min. G=7.62 Min. Loss factor: General J material Marking	Al=2445 Min. B=4.07 Min. 2B=8.15 Min. G= 7.6 Min. Loss factor: Detail as indicated No marking

A Division of Spang & Company

Specification for:

DP-41408-UG

110 Delta Drive
Pittsburgh, PA 15238
Phone: 412/696-1333
Fax: 412/696-0333
Email:magnetics@spang.com

DIMENSIONS

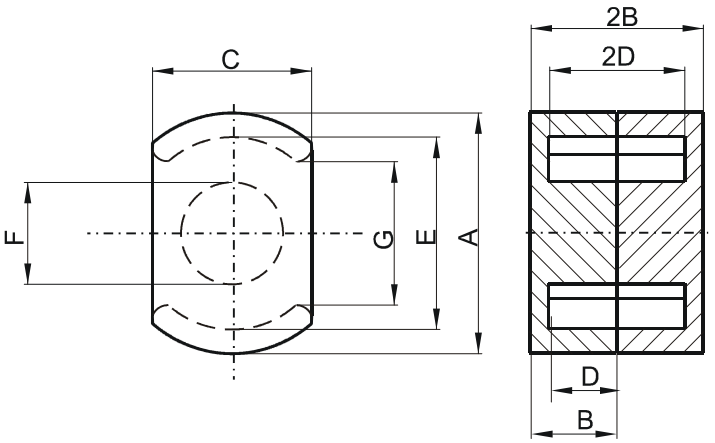

(mm)	Nominal:	Tol. min.:	Tol. max.:
A	14.05	-0.25	+ 0.25
B	4.15	-0.08	+ 0.08
2B	8.3	-0.15	+ 0.15
C	9.4	-0.15	+ 0.15
D	2.9	-0.1	+ 0.1
2D	5.8	-0.2	+ 0.2
E	11.8	-0.2	+ 0.2
F	5.9	-0.1	+ 0.1
G	7.6 Min.		
Eff. Parameters			
Ae mm ^{2}	**Amin mm ^{2}**	**le mm**	**Ve mm ^{3}**
24.6	23.5	22.6	556

INDUCTANCE

AL value (nH)	Test conditions
Nom: 1800 Min.: 1350	10 kHz, < 0.5 mT, 25 ℃

MARKING

No marking

CORE LOSSES

P_l max	Test conditions
121 mW/cm³ (0.067 W/set)	100 kHz, 100 mT, 100 ℃

NOTE

Spec. modifications	Previous	Revised
2005-06-22	B=4.11 Min. 2B=8.20 Min. G=7.62 Min. Losses: General P material Marking	B=4.07 Min. 2B=8.15 Min. G= 7.6 Min. Losses: Detail as indicated No marking

A Division of Spang & Company

Specification for:

DR-41408-UG

110 Delta Drive
Pittsburgh, PA 15238
Phone: 412/696-1333
Fax: 412/696-0333
Email:magnetics@spang.com

DIMENSIONS

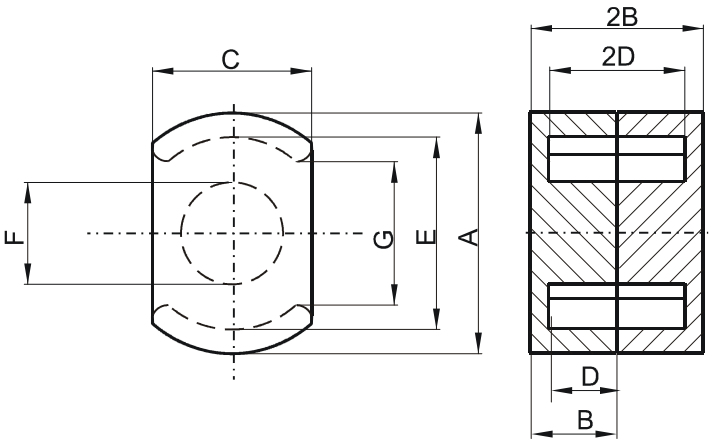

(mm)	Nominal:	Tol. min.:	Tol. max.:
A	14.05	-0.25	+ 0.25
B	4.15	-0.08	+ 0.08
2B	8.3	-0.15	+ 0.15
C	9.4	-0.15	+ 0.15
D	2.9	-0.1	+ 0.1
2D	5.8	-0.2	+ 0.2
E	11.8	-0.2	+ 0.2
F	5.9	-0.1	+ 0.1
G	7.6 Min.		
Eff. Parameters			
Ae mm ^{2}	**Amin mm ^{2}**	**le mm**	**Ve mm ^{3}**
24.6	23.5	22.6	556

INDUCTANCE

AL value (nH)	Test conditions
Nom: 1653 Min.: 1240	10 kHz, < 0.5 mT, 25 ℃

MARKING

No marking

CORE LOSSES

P_l max	Test conditions
95 mW/cm³ (0.053 W/set)	100 kHz, 100 mT, 100 ℃
558 mW/cm³ (0.31 W/set)	100 kHz, 200 mT, 100 ℃

NOTE

Spec. modifications	Previous	Revised
2005-06-22	B=4.11 Min. 2B=8.20 Min. G=7.62 Min. Losses: General R material Marking	B=4.07 Min. 2B=8.15 Min. G= 7.6 Min. Losses: Detail as indicated No Marking

MAGNETICS®
A Division of Spang & Company

Specification for:

DW-41408-UG

110 Delta Drive
Pittsburgh, PA 15238
Phone: 412/696-1333
Fax: 412/696-0333
Email:magnetics@spang.com

DIMENSIONS

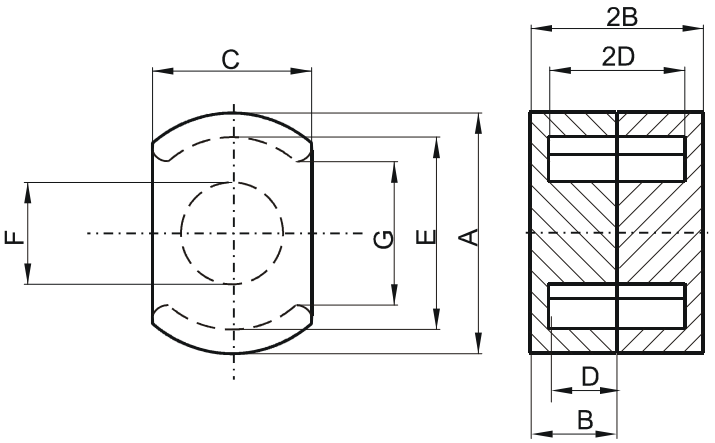

(mm)	Nominal:	Tol. min.:	Tol. max.:
A	14.05	-0.25	+ 0.25
B	4.15	-0.08	+ 0.08
2B	8.3	-0.15	+ 0.15
C	9.4	-0.15	+ 0.15
D	2.9	-0.1	+ 0.1
2D	5.8	-0.2	+ 0.2
E	11.8	-0.2	+ 0.2
F	5.9	-0.1	+ 0.1
G	7.6 Min.		
Eff. Parameters			
Ae mm ^{2}	**Amin mm ^{2}**	**le mm**	**Ve mm ^{3}**
24.6	23.5	22.6	556

INDUCTANCE

AL value (nH)	Test conditions
Nom: 7929 Min.: 5550	10 kHz, < 0.5 mT, 25 ℃

MARKING

No marking

LOSS FACTOR

tan δ/μ (x10^{-6})	Test conditions
< 3.5	10 kHz, < 0.25 mT, 25 ℃
< 50	100 kHz, < 0.25 mT, 25 ℃

NOTE

Spec. modifications	Previous	Revised
2005-06-22	B=4.11 Min. 2B=8.20 Min. G=7.62 Min. Loss factor: General W material Marking	B=4.07 Min. 2B=8.15 Min. G= 7.6 Min. Loss factor: Detail as indicated No marking

A Division of Spang & Company

Specification for:

DJ-43019-UG

110 Delta Drive
Pittsburgh, PA 15238
Phone: 412/696-1333
Fax: 412/696-0333
Email:magnetics@spang.com

DIMENSIONS

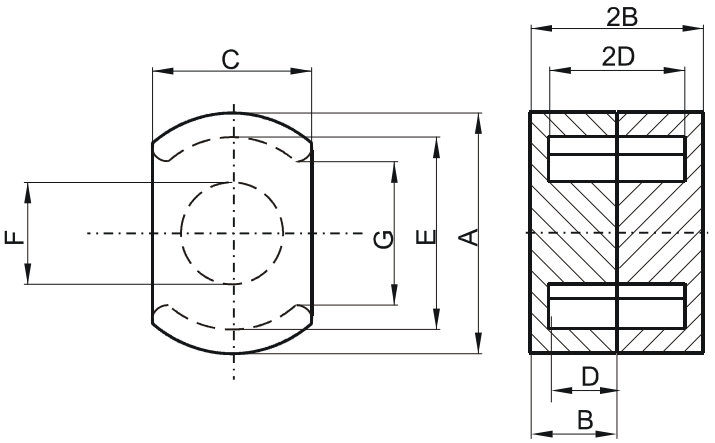

(mm)	Nominal:	Tol. min.:	Tol. max.:
A	30.0	-0.51	+ 0.51
B	9.4	-0.1	+ 0.1
2B	18.8	-0.2	+ 0.2
C	20.32	-0.25	+ 0.25
D	6.5 Min.		
2D	13.0 Min.		
E	25.0 Min.		
F	13.51 Max.		
G	15.49 Min.		
Eff. Parameters			
Ae mm ^{2}	**Amin mm ^{2}**	**le mm**	**Ve mm ^{3}**
117.0	96.0	46.2	5410

INDUCTANCE

AL value (nH)	Test conditions
Nom: 9493 Min.: 7120	10 kHz, < 0.5 mT, 25 ℃

MARKING

No marking

LOSS FACTOR

tan δ/μ (x10^{-6})	Test conditions
< 36	100 kHz, < 0.25 mT, 25 ℃

NOTE

Spec. modifications	Previous	Revised
2005-06-22	Loss factor: General J material Marking	Loss factor: Detail as indicated No marking

A Division of Spang & Company

Specification for:

FF-43208-IC

110 Delta Drive
Pittsburgh, PA 15238
Phone: 412/696-1333
Fax: 412/696-0333
Email:magnetics@spang.com

DIMENSIONS

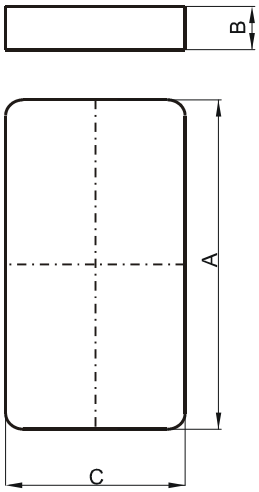

(mm)	Nominal:	Tol. min.:	Tol. max.:
A	31.75	-0.64	+ 0.64
B	3.18	-0.13	+ 0.13
C	20.32	-0.41	+ 0.41
Eff. Parameters (with F_43208EC)			
Ae mm ^{2}	**Amin mm ^{2}**	**le mm**	**Ve mm ^{3}**
130.0	130.0	35.1	4560

INDUCTANCE

AL value (nH)	Test conditions (with FF43208EC)
8711 ± 25%	10 kHz, < 0.5 mT, 25 ℃

MARKING

FF43208IC
PXXXXX

CORE LOSSES

P_l max	Test conditions
204 mW/cm³ (0.93 W/set)	25 kHz, 200 mT, 100 ℃

NOTE

Spec. modifications	Previous	Revised
2005-06-22	AL=10313±25% A=32.26 Max. A=31.24 Min. Losses: General F material	AL=9760±25% A=32.39 Max. A=31.11 Min. Losses: Detail as indicated

A Division of Spang & Company

Specification for:

FR-43808-EC

110 Delta Drive
Pittsburgh, PA 15238
Phone: 412/696-1333
Fax: 412/696-0333
Email:magnetics@spang.com

DIMENSIONS

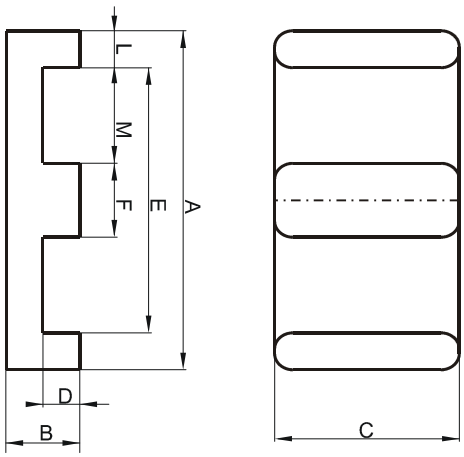

(mm)	Nominal:	Tol. min.:	Tol. max.:
A	38.1	-0.76	+ 0.76
B	8.26	-0.13	+ 0.13
C	25.4	-0.51	+ 0.51
D	4.45	-0.13	+ 0.13
E	30.23 Min.		
F	7.62	-0.15	+ 0.15
L	3.81		
M	11.43		
Eff. Parameters			
Ae mm ^{2}	**Amin mm ^{2}**	**le mm**	**Ve mm ^{3}**
194.0	194.0	52.4	10200

INDUCTANCE

AL value (nH)	Test conditions
Nom: 7863 Min.: 5897	10 kHz, < 0.5 mT, 25 ℃

MARKING

FR43808EC
PXXXXX

CORE LOSSES

P_l max	Test conditions
98 mW/cm³ (1.0 W/set)	100 kHz, 100 mT, 100 ℃
588 mW/cm³ (6.0 W/set)	100 kHz, 200 mT, 100 ℃

NOTE

Spec. modifications	Previous	Revised
2005-06-22	Losses: General R material	Losses: Detail as indicated

A Division of Spang & Company

Specification for:

FF-43808-EC

110 Delta Drive
Pittsburgh, PA 15238
Phone: 412/696-1333
Fax: 412/696-0333
Email:magnetics@spang.com

DIMENSIONS

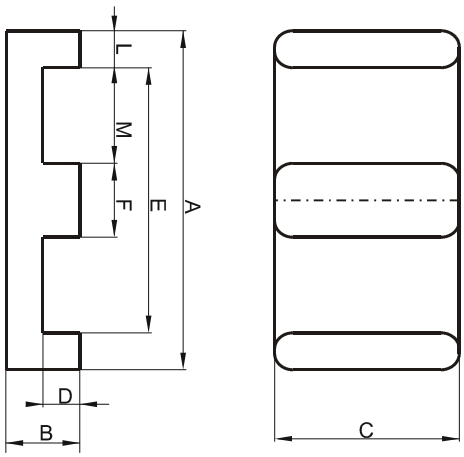

(mm)	Nominal:	Tol. min.:	Tol. max.:
A	38.1	-0.76	+ 0.76
B	8.26	-0.13	+ 0.13
C	25.4	-0.51	+ 0.51
D	4.45	-0.13	+ 0.13
E	30.23 Min.		
F	7.62	-0.15	+ 0.15
L	3.81		
M	11.43		
Eff. Parameters			
Ae mm ^{2}	**Amin mm ^{2}**	**le mm**	**Ve mm ^{3}**
194.0	194.0	52.4	10200

INDUCTANCE

AL value (nH)	Test conditions
9490 ± 25%	10 kHz, < 0.5 mT, 25 ℃

MARKING

FF43808EC
PXXXXX

CORE LOSSES

P_l max	Test conditions
205 mW/cm³ (2.09 W/set)	25 kHz, 200 mT, 100 ℃

NOTE

Spec. modifications	Previous	Revised
2005-06-22	AL=10300±25% Losses: General F material	AL=9490±25% Losses: Detail as indicated

MAGNETICS®
A Division of Spang & Company

Specification for:

FR-43808-IC

110 Delta Drive
Pittsburgh, PA 15238
Phone: 412/696-1333
Fax: 412/696-0333
Email:magnetics@spang.com

DIMENSIONS

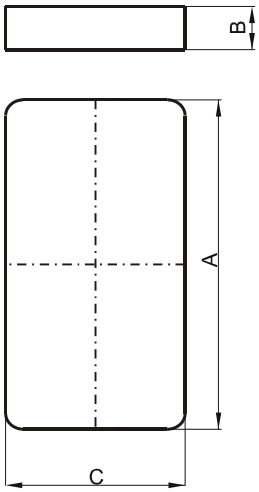

(mm)	Nominal:	Tol. min.:	Tol. max.:
A	38.1	-0.76	+ 0.76
B	3.81	-0.13	+ 0.13
C	25.4	-0.51	+ 0.51
Eff. Parameters (with F_43808EC)			
Ae mm ^{2}	**Amin mm ^{2}**	**le mm**	**Ve mm ^{3}**
194.0	194.0	43.7	8460

INDUCTANCE

AL value (nH)	Test conditions (with FR43808EC)
Nom: 9028 Min.: 6771	10 kHz, < 0.5 mT, 25 ℃

MARKING

FR43808IC
PXXXXX

CORE LOSSES

P_l max	Test conditions
100 mW/cm³ (0.85 W/set)	100 kHz, 100 mT, 100 ℃
591 mW/cm³ (5.0 W/set)	100 kHz, 200 mT, 100 ℃

NOTE

Spec. modifications	Previous	Revised
2005-06-22	AL=9028 Min. AL=9467 Nom. Losses: General R material	AL=6771 Min. AL=7946 Nom. Losses: Detail as indicated

A Division of Spang & Company

Specification for:

FP-43808-IC

110 Delta Drive
Pittsburgh, PA 15238
Phone: 412/696-1333
Fax: 412/696-0333
Email:magnetics@spang.com

DIMENSIONS

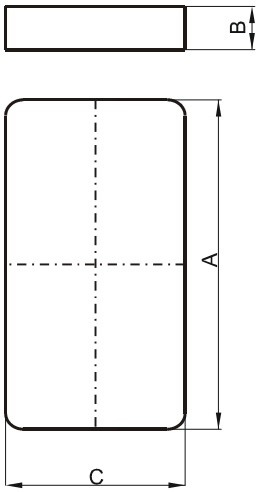

(mm)	Nominal:	Tol. min.:	Tol. max.:
A	38.1	-0.76	+ 0.76
B	3.81	-0.13	+ 0.13
C	25.4	-0.51	+ 0.51
Eff. Parameters (with F_43808EC)			
Ae mm ^{2}	**Amin mm ^{2}**	**le mm**	**Ve mm ^{3}**
194.0	194.0	43.7	8460

INDUCTANCE

AL value (nH)	Test conditions (with FP43808EC)
Nom: 9566 Min.: 7175	10 kHz, < 0.5 mT, 25 ℃

MARKING

FP43808IC
PXXXXX

CORE LOSSES

P_l max	Test conditions
124 mW/cm³ (1.25 W/set)	100 kHz, 100 mT, 100 ℃

NOTE

Spec. modifications	Previous	Revised
2005-06-22	Losses: General P material	Losses: Detail as indicated

A Division of Spang & Company

Specification for:

FF-43808-IC

110 Delta Drive
Pittsburgh, PA 15238
Phone: 412/696-1333
Fax: 412/696-0333
Email:magnetics@spang.com

DIMENSIONS

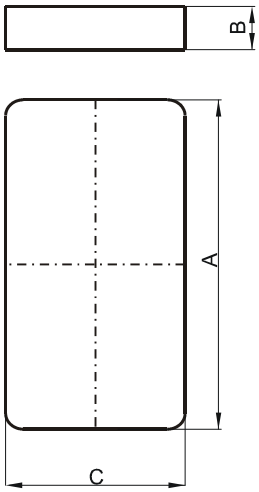

(mm)	Nominal:	Tol. min.:	Tol. max.:
A	38.1	-0.76	+ 0.76
B	3.81	-0.13	+ 0.13
C	25.4	-0.51	+ 0.51
Eff. Parameters (with F_43808EC)			
Ae mm ^{2}	**Amin mm ^{2}**	**le mm**	**Ve mm ^{3}**
194.0	194.0	43.7	8460

INDUCTANCE

AL value (nH)	Test conditions (with FF43808EC)
10801 ± 25%	10 kHz, < 0.5 mT, 25 ℃

MARKING

FF43808IC
PXXXXX

CORE LOSSES

P_l max	Test conditions
213 mW/cm³ (1.8 W/set)	25 kHz, 200 mT, 100 ℃

NOTE

Spec. modifications	Previous	Revised
2005-06-22	AL=12400±25% Losses: General F material	AL=10801±25% Losses: Detail as indicated

A Division of Spang & Company

Specification for:

FP-44310-EC

110 Delta Drive
Pittsburgh, PA 15238
Phone: 412/696-1333
Fax: 412/696-0333
Email:magnetics@spang.com

DIMENSIONS

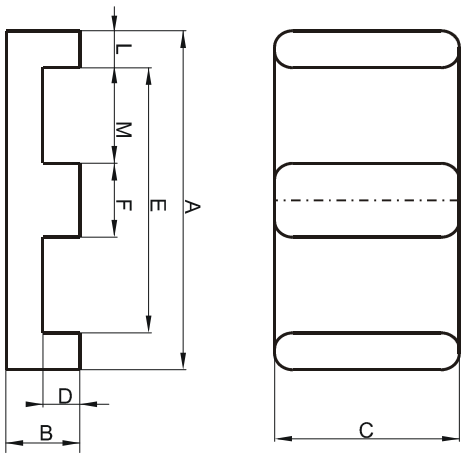

(mm)	Nominal:	Tol. min.:	Tol. max.:
A	43.2	-0.9	+ 0.9
B	9.5	-0.13	+ 0.13
C	27.9	-0.6	+ 0.6
D	5.4	-0.13	+ 0.13
E	34.7 Min.		
F	8.1	-0.2	+ 0.2
L	4.7 Max.		
M	13.2 Min.		
Eff. Parameters			
Ae mm ^{2}	**Amin mm ^{2}**	**le mm**	**Ve mm ^{3}**
229.0	229.0	61.1	13900

INDUCTANCE

AL value (nH)	Test conditions
Nom: 8803 Min.: 6602	10 kHz, < 0.5 mT, 25 ℃

MARKING

FP44310EC
PXXXXX

CORE LOSSES

P_l max	Test conditions
129 mW/cm³ (1.8 W/set)	100 kHz, 100 mT, 100 ℃
129 mW/cm³ (1.8 W/set)	100 kHz, 100 mT, 100 ℃

NOTE

Spec. modifications	Previous	Revised
2005-06-22	AL=6530 Min. AL=8707 Nom. A=43.69 Max. A=42.67 Min. B=9.40 Min. C=28.32 Max. C=27.56 Min. D=5.33 Min. L=4.064±0.13 M=13.46±0.15 Losses: General P material	AL=6602 Min. AL=8803 Nom. A=44.1 Max. A=42.3 Min. B=9.37 Min. C=28.5 Max. C=27.3 Min. D=5.27 Min. L=4.7 Max. M=13.2 Min. Losses: Detail as indicated

A Division of Spang & Company

Specification for:

FF-44310-EC

110 Delta Drive
Pittsburgh, PA 15238
Phone: 412/696-1333
Fax: 412/696-0333
Email:magnetics@spang.com

DIMENSIONS

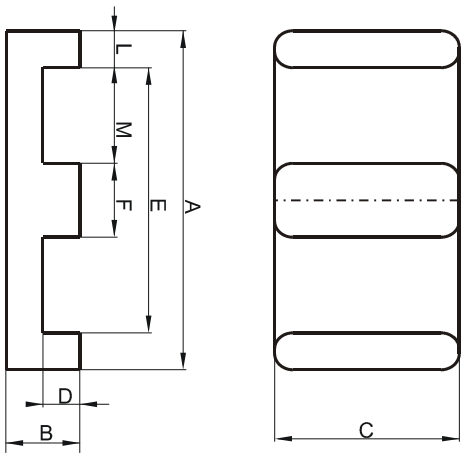

(mm)	Nominal:	Tol. min.:	Tol. max.:
A	43.2	-0.9	+ 0.9
B	9.5	-0.13	+ 0.13
C	27.9	-0.6	+ 0.6
D	5.4	-0.13	+ 0.13
E	34.7 Min.		
F	8.1	-0.2	+ 0.2
L	4.7 Max.		
M	13.2 Min.		
Eff. Parameters			
Ae mm ^{2}	**Amin mm ^{2}**	**le mm**	**Ve mm ^{3}**
229.0	229.0	61.1	13900

INDUCTANCE

AL value (nH)	Test conditions
10057 ± 25%	10 kHz, < 0.5 mT, 25 ℃

MARKING

FF44310EC
PXXXXX

CORE LOSSES

P_l max	Test conditions
209 mW/cm³ (2.9 W/set)	25 kHz, 200 mT, 100 ℃

NOTE

Spec. modifications	Previous	Revised
2005-06-22	AL=10450±25% A=43.69 Max. A=42.67 Min. B=9.40 Min. C=28.32 Max. C=27.56 Min. D=5.33 Min. L=4.064±0.13 M=13.46±0.15 Losses: General F material	AL=10057±25% A=44.1 Max. A=42.3 Min. B=9.37 Min. C=28.5 Max. C=27.3 Min. D=5.27 Min. L=4.7 Max. M=13.2 Min. Losses: Detail as indicated

A Division of Spang & Company

Specification for:

FP-44310-IC

110 Delta Drive
Pittsburgh, PA 15238
Phone: 412/696-1333
Fax: 412/696-0333
Email:magnetics@spang.com

DIMENSIONS

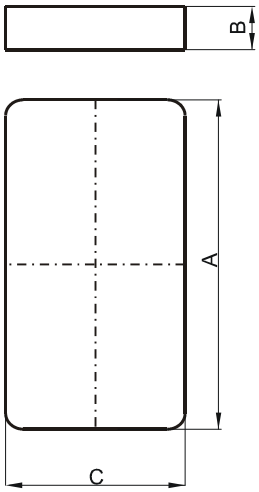

(mm)	Nominal:	Tol. min.:	Tol. max.:
A	43.2	-0.9	+ 0.9
B	4.1	-0.13	+ 0.13
C	27.9	-0.6	+ 0.6
Eff. Parameters (with F_44310EC)			
Ae mm ^{2}	**Amin mm ^{2}**	**le mm**	**Ve mm ^{3}**
229.0	229.0	50.4	11500

INDUCTANCE

AL value (nH)	Test conditions (with FP44310EC)
Nom: 10130 Min.: 7598	10 kHz, < 0.5 mT, 25 ℃

MARKING

FP44310IC
PXXXXX

CORE LOSSES

P_l max	Test conditions
130 mW/cm³ (1.5 W/set)	100 kHz, 100 mT, 100 ℃

NOTE

Spec. modifications	Previous	Revised
2005-06-22	AL=10667 Nom. AL=8000 Min. A=43.7 Max. A=42.7 Min. B=4.19 Max. C=28.3 Max. C=27.6 Min. Losses: General P material	AL=10130 Nom. AL=7598 Min. A=44.1 Max. A=42.3 Min. B=4.23 Max. C=28.5 Max. C=27.3 Min. Losses: Detail as indicated

A Division of Spang & Company

Specification for:

FF-44310-IC

110 Delta Drive
Pittsburgh, PA 15238
Phone: 412/696-1333
Fax: 412/696-0333
Email:magnetics@spang.com

DIMENSIONS

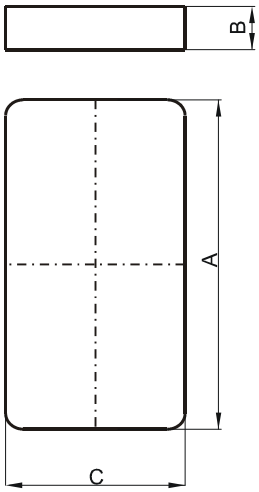

(mm)	Nominal:	Tol. min.:	Tol. max.:
A	43.2	-0.9	+ 0.9
B	4.1	-0.13	+ 0.13
C	27.9	-0.6	+ 0.6
Eff. Parameters (with F_44310EC)			
Ae mm ^{2}	**Amin mm ^{2}**	**le mm**	**Ve mm ^{3}**
229.0	229.0	50.4	11500

INDUCTANCE

AL value (nH)	Test conditions (with FF44310EC)
11489 ± 25%	10 kHz, < 0.5 mT, 25 ℃

MARKING

FF44310IC
PXXXXX

CORE LOSSES

P_l max	Test conditions
209 mW/cm³ (2.4 W/set)	25 kHz, 200 mT, 100 ℃

NOTE

Spec. modifications	Previous	Revised
2005-06-22	AL=12800±25% A=43.7 Max. A=42.7 Min. B=4.19 Max. C=28.3 Max. C=27.6 Min. Losses: General F material	AL=11489±25% A=44.1 Max. A=42.3 Min. B=4.23 Max. C=28.5 Max. C=27.3 Min. Losses: Detail as indicated

A Division of Spang & Company

Specification for:

FR-44310-IC

110 Delta Drive
Pittsburgh, PA 15238
Phone: 412/696-1333
Fax: 412/696-0333
Email:magnetics@spang.com

DIMENSIONS

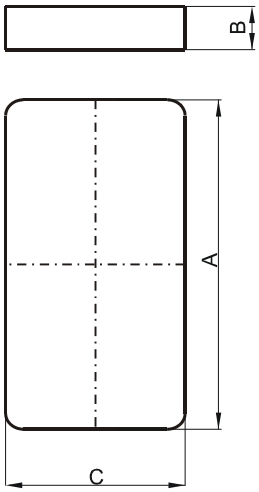

(mm)	Nominal:	Tol. min.:	Tol. max.:
A	43.2	-0.9	+ 0.9
B	4.1	-0.13	+ 0.13
C	27.9	-0.6	+ 0.6
Eff. Parameters (with F_44310EC)			
Ae mm ^{2}	**Amin mm ^{2}**	**le mm**	**Ve mm ^{3}**
229.0	229.0	50.4	11500

INDUCTANCE

AL value (nH)	Test conditions (with FR44310EC)
Nom: 9541 Min.: 7156	10 kHz, < 0.5 mT, 25 ℃

MARKING

FR44310IC
PXXXXX

CORE LOSSES

P_l max	Test conditions
104 mW/cm³ (1.2 W/set)	100 kHz, 100 mT, 100 ℃
608 mW/cm³ (7 W/set)	100 kHz, 200 mT, 100 ℃

NOTE

Spec. modifications	Previous	Revised
2005-06-22	A=43.7 Max. A=42.7 Min. B=4.19 Max. C=28.3 Max. C=27.6 Min. Losses: General R material	A=44.1 Max. A=42.3 Min. B=4.23 Max. C=28.5 Max. C=27.3 Min. Losses: Detail as indicated

A Division of Spang & Company

Specification for:

HJ-42311-UG

110 Delta Drive
Pittsburgh, PA 15238
Phone: 412/696-1333
Fax: 412/696-0333
Email:magnetics@spang.com

DIMENSIONS

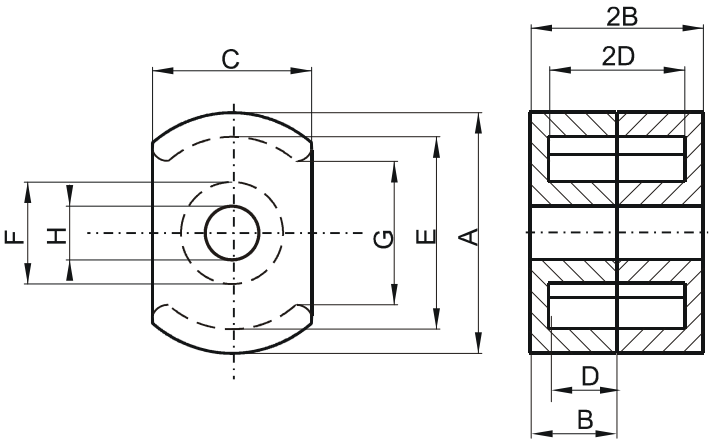

(mm)	Nominal:	Tol. min.:	Tol. max.:
A	22.86	-0.46	+ 0.46
B	5.54	-0.13	+ 0.13
2B	11.08	-0.26	+ 0.26
C	15.24	-0.25	+ 0.25
D	3.63 Min.		
2D	7.26 Min.		
E	17.93 Min.		
F	9.9 Max.		
G	13.21 Min.		
H	5.1	-0.1	+ 0.1
Eff. Parameters			
Ae mm ^{2}	**Amin mm ^{2}**	**le mm**	**Ve mm ^{3}**
48.2	37.8	27.0	1300

INDUCTANCE

AL value (nH)	Test conditions
Nom: 7853 Min.: 5890	10 kHz, < 0.5 mT, 25 ℃

MARKING

No marking

LOSS FACTOR

tan δ/μ (x10^{-6})	Test conditions
< 20	100 kHz, < 0.25 mT, 25 ℃

NOTE

Spec. modifications	Previous	Revised
2005-06-22	H=5.08±0.1 Loss factor: General J material	H=5.1±0.1 Loss factor: Detail as indicated

A Division of Spang & Company

Specification for:

HR-42311-UG

110 Delta Drive
Pittsburgh, PA 15238
Phone: 412/696-1333
Fax: 412/696-0333
Email:magnetics@spang.com

DIMENSIONS

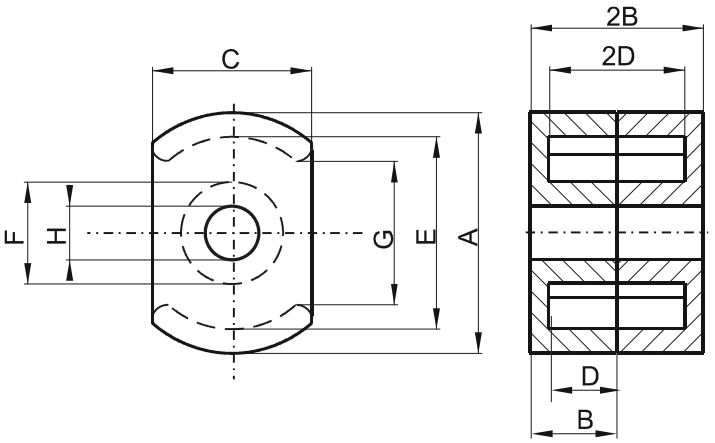

(mm)	Nominal:	Tol. min.:	Tol. max.:
A	22.86	-0.46	+ 0.46
B	5.54	-0.13	+ 0.13
2B	11.08	-0.26	+ 0.26
C	15.24	-0.25	+ 0.25
D	3.63 Min.		
2D	7.26 Min.		
E	17.93 Min.		
F	9.9 Max.		
G	13.21 Min.		
H	5.1	-0.1	+ 0.1
Eff. Parameters			
Ae mm ^{2}	**Amin mm ^{2}**	**le mm**	**Ve mm ^{3}**
48.2	37.8	27.0	1300

INDUCTANCE

AL value (nH)	Test conditions
Nom: 3200 Min.: 2400	10 kHz, < 0.5 mT, 25 ℃

MARKING

R
UG

CORE LOSSES

P_l max	Test conditions
100 mW/cm³ (0.13 W/set)	100 kHz, 100 mT, 100 ℃
615 mW/cm³ (0.8 W/set)	100 kHz, 200 mT, 100 ℃

NOTE

Spec. modifications	Previous	Revised
2005-06-22	H=5.08±0.1 Losses: General R material	H=5.1±0.1 Losses: Detail as indicated

A Division of Spang & Company

Specification for:

HW-42311-UG

110 Delta Drive
Pittsburgh, PA 15238
Phone: 412/696-1333
Fax: 412/696-0333
Email:magnetics@spang.com

DIMENSIONS

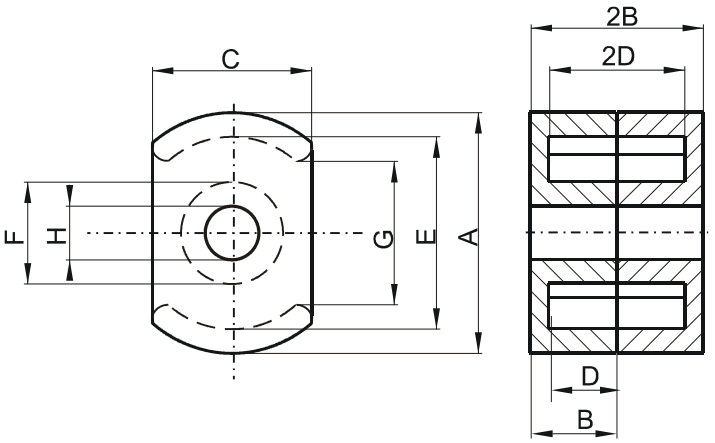

(mm)	Nominal:	Tol. min.:	Tol. max.:
A	22.86	-0.46	+ 0.46
B	5.54	-0.13	+ 0.13
2B	11.08	-0.26	+ 0.26
C	15.24	-0.25	+ 0.25
D	3.63 Min.		
2D	7.26 Min.		
E	17.93 Min.		
F	9.9 Max.		
G	13.21 Min.		
H	5.1	-0.1	+ 0.1
Eff. Parameters			
Ae mm ^{2}	**Amin mm ^{2}**	**le mm**	**Ve mm ^{3}**
48.2	37.8	27.0	1300

INDUCTANCE

AL value (nH)	Test conditions
Nom: 14021 Min.: 9815	10 kHz, < 0.5 mT, 25 ℃

MARKING

No marking

LOSS FACTOR

tan δ/μ (x10^{-6})	Test conditions
< 3.5	10 kHz, < 0.25 mT, 25 ℃
< 50	100 kHz, < 0.25 mT, 25 ℃

NOTE

Spec. modifications	Previous	Revised
2005-06-22	H=5.08±0.1 Loss factor: General W material	H=5.1±0.1 Loss factor: Detail as indicated

A Division of Spang & Company

Specification for:

HF-42311-UG

110 Delta Drive
Pittsburgh, PA 15238
Phone: 412/696-1333
Fax: 412/696-0333
Email:magnetics@spang.com

DIMENSIONS

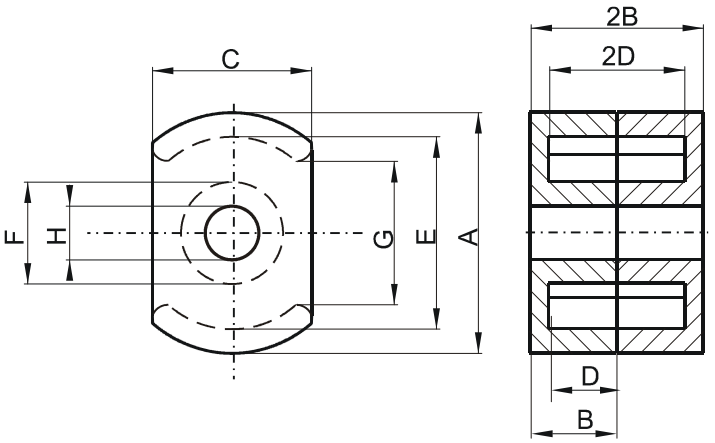

(mm)	Nominal:	Tol. min.:	Tol. max.:
A	22.86	-0.46	+ 0.46
B	5.54	-0.13	+ 0.13
2B	11.08	-0.26	+ 0.26
C	15.24	-0.25	+ 0.25
D	3.63 Min.		
2D	7.26 Min.		
E	17.93 Min.		
F	9.9 Max.		
G	13.21 Min.		
H	5.1	-0.1	+ 0.1
Eff. Parameters			
Ae mm ^{2}	**Amin mm ^{2}**	**le mm**	**Ve mm ^{3}**
48.2	37.8	27.0	1300

INDUCTANCE

AL value (nH)	Test conditions
4170 ± 25%	10 kHz, < 0.5 mT, 25 ℃

MARKING

F
UG

CORE LOSSES

P_l max	Test conditions
208 mW/cm³ (0.27 W/set)	25 kHz, 200 mT, 100 ℃

NOTE

Spec. modifications	Previous	Revised
2005-06-22	H=5.08±0.1 Losses: General F material	H=5.1±0.1 Losses: Detail as indicated

A Division of Spang & Company

Specification for:

HP-42311-UG

110 Delta Drive
Pittsburgh, PA 15238
Phone: 412/696-1333
Fax: 412/696-0333
Email:magnetics@spang.com

DIMENSIONS

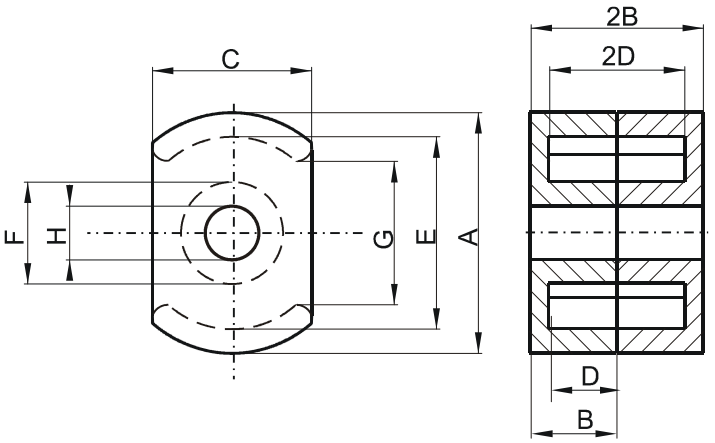

(mm)	Nominal:	Tol. min.:	Tol. max.:
A	22.86	-0.46	+ 0.46
B	5.54	-0.13	+ 0.13
2B	11.08	-0.26	+ 0.26
C	15.24	-0.25	+ 0.25
D	3.63 Min.		
2D	7.26 Min.		
E	17.93 Min.		
F	9.9 Max.		
G	13.21 Min.		
H	5.1	-0.1	+ 0.1
Eff. Parameters			
Ae mm ^{2}	**Amin mm ^{2}**	**le mm**	**Ve mm ^{3}**
48.2	37.8	27.0	1300

INDUCTANCE

AL value (nH)	Test conditions
Nom: 3460 Min.: 2595	10 kHz, < 0.5 mT, 25 ℃

MARKING

P
UG

CORE LOSSES

P_l max	Test conditions
115 mW/cm³ (0.15 W/set)	100 kHz, 100 mT, 100 ℃

NOTE

Spec. modifications	Previous	Revised
2005-06-22	H=5.08±0.1 Losses: General P material	H=5.1±0.1 Losses: Detail as indicated

A Division of Spang & Company

Specification for:

NJ-41110-UG

110 Delta Drive
Pittsburgh, PA 15238
Phone: 412/696-1333
Fax: 412/696-0333
Email:magnetics@spang.com

DIMENSIONS

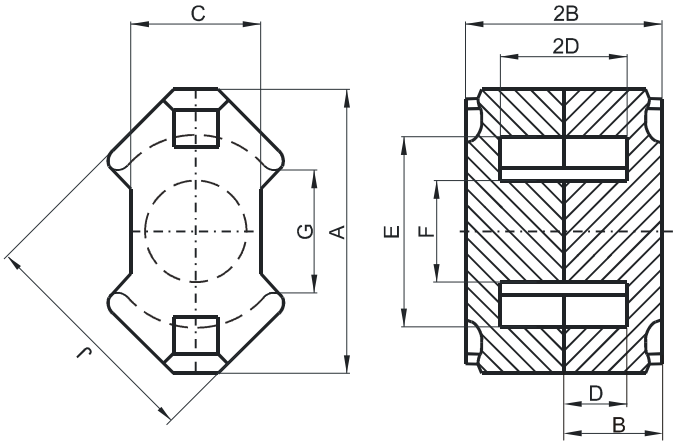

(mm)	Nominal:	Tol. min.:	Tol. max.:
A	11.0	-0.5	0.0
B	5.2	-0.05	+ 0.05
2B	10.4	-0.1	+ 0.1
C	4.6	-0.2	0.0
D	3.5	0.0	+ 0.2
2D	7.0	0.0	+ 0.4
E	7.95	0.0	+ 0.4
F	3.9	-0.2	0.0
G	5.8 Min.		
J	9.8	-0.4	0.0
Eff. Parameters			
Ae mm ^{2}	**Amin mm ^{2}**	**le mm**	**Ve mm ^{3}**
13.8	11.5	23.3	322

INDUCTANCE

AL value (nH)	Test conditions
Nom: 1752 Min.: 1314	10 kHz, < 0.5 mT, 25 ℃

MARKING

No marking

LOSS FACTOR

tan δ/μ (x10^{-6})	Test conditions
< 15	100 kHz, < 0.25 mT, 25 ℃

NOTE

Spec. modifications	Previous	Revised
2005-06-16	Loss factor: General J material Marking	Loss factor: Detail as indicated No marking

A Division of Spang & Company

Specification for:

NF-41110-UG

110 Delta Drive
Pittsburgh, PA 15238
Phone: 412/696-1333
Fax: 412/696-0333
Email:magnetics@spang.com

DIMENSIONS

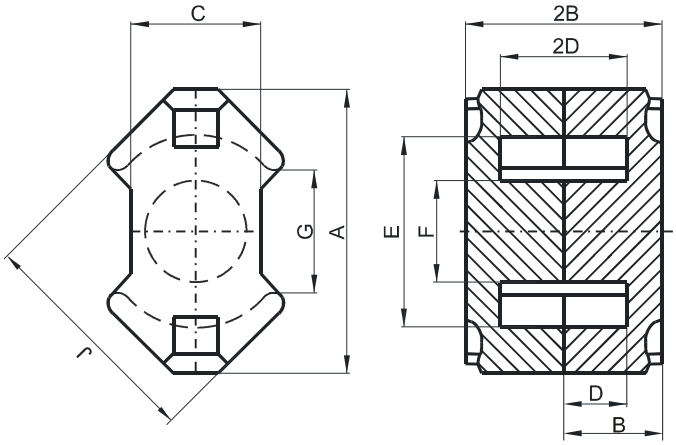

(mm)	Nominal:	Tol. min.:	Tol. max.:
A	11.0	-0.5	0.0
B	5.2	-0.05	+ 0.05
2B	10.4	-0.1	+ 0.1
C	4.6	-0.2	0.0
D	3.5	0.0	+ 0.2
2D	7.0	0.0	+ 0.4
E	7.95	0.0	+ 0.4
F	3.9	-0.2	0.0
G	5.8 Min.		
J	9.8	-0.4	0.0
Eff. Parameters			
Ae mm ^{2}	**Amin mm ^{2}**	**le mm**	**Ve mm ^{3}**
13.8	11.5	23.3	322

INDUCTANCE

AL value (nH)	Test conditions
1333 ± 25%	10 kHz, < 0.5 mT, 25 ℃

MARKING

No marking

CORE LOSSES

P_l max	Test conditions
248 mW/cm³ (0.08 W/set)	25 kHz, 200 mT, 100 ℃

A Division of Spang & Company

Specification for:

NW-41110-UG

110 Delta Drive
Pittsburgh, PA 15238
Phone: 412/696-1333
Fax: 412/696-0333
Email:magnetics@spang.com

DIMENSIONS

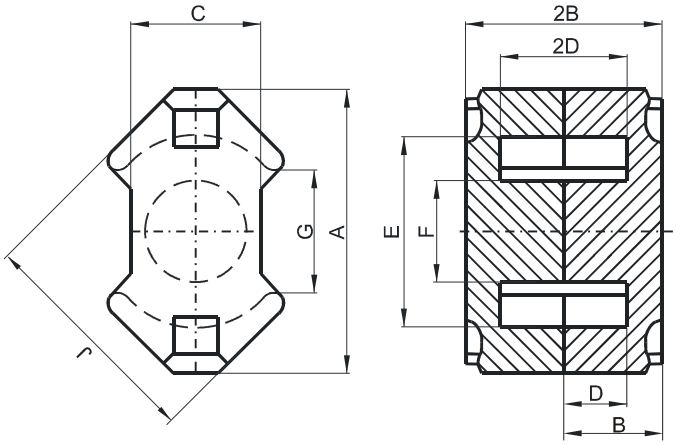

(mm)	Nominal:	Tol. min.:	Tol. max.:
A	11.0	-0.5	0.0
B	5.2	-0.05	+ 0.05
2B	10.4	-0.1	+ 0.1
C	4.6	-0.2	0.0
D	3.5	0.0	+ 0.2
2D	7.0	0.0	+ 0.4
E	7.95	0.0	+ 0.4
F	3.9	-0.2	0.0
G	5.8 Min.		
J	9.8	-0.4	0.0
Eff. Parameters			
Ae mm ^{2}	**Amin mm ^{2}**	**le mm**	**Ve mm ^{3}**
13.8	11.5	23.3	322

INDUCTANCE

AL value (nH)	Test conditions
Nom: 3518 Min.: 2463	10 kHz, < 0.5 mT, 25 ℃

MARKING

No marking

LOSS FACTOR

tan δ/μ (x10^{-6})	Test conditions
< 3	10 kHz, < 0.25 mT, 25 ℃
< 45	100 kHz, < 0.25 mT, 25 ℃

NOTE

Spec. modifications	Previous	Revised
2005-06-22	Loss factor: General W material Marking	Loss factor: Detail as indicated No marking

A Division of Spang & Company

Specification for:

NP-41110-UG

110 Delta Drive
Pittsburgh, PA 15238
Phone: 412/696-1333
Fax: 412/696-0333
Email:magnetics@spang.com

DIMENSIONS

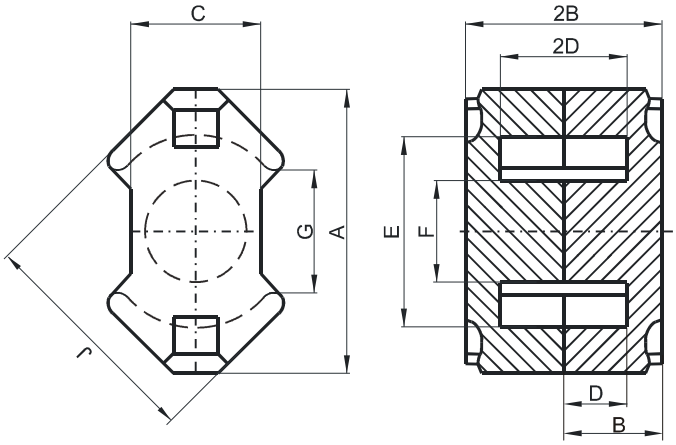

(mm)	Nominal:	Tol. min.:	Tol. max.:
A	11.0	-0.5	0.0
B	5.2	-0.05	+ 0.05
2B	10.4	-0.1	+ 0.1
C	4.6	-0.2	0.0
D	3.5	0.0	+ 0.2
2D	7.0	0.0	+ 0.4
E	7.95	0.0	+ 0.4
F	3.9	-0.2	0.0
G	5.8 Min.		
J	9.8	-0.4	0.0
Eff. Parameters			
Ae mm ^{2}	**Amin mm ^{2}**	**le mm**	**Ve mm ^{3}**
13.8	11.5	23.3	322

INDUCTANCE

AL value (nH)	Test conditions
Nom: 1191 Min.: 893	10 kHz, < 0.5 mT, 25 ℃

MARKING

No marking

CORE LOSSES

P_l max	Test conditions
124 mW/cm³ (0.04 W/set)	100 kHz, 100 mT, 100 ℃

NOTE

Spec. modifications	Previous	Revised
2005-06-22	Losses: General P material Marking	Losses: Detail as indicated No marking

A Division of Spang & Company

Specification for:

NR-41110-UG

110 Delta Drive
Pittsburgh, PA 15238
Phone: 412/696-1333
Fax: 412/696-0333
Email:magnetics@spang.com

DIMENSIONS

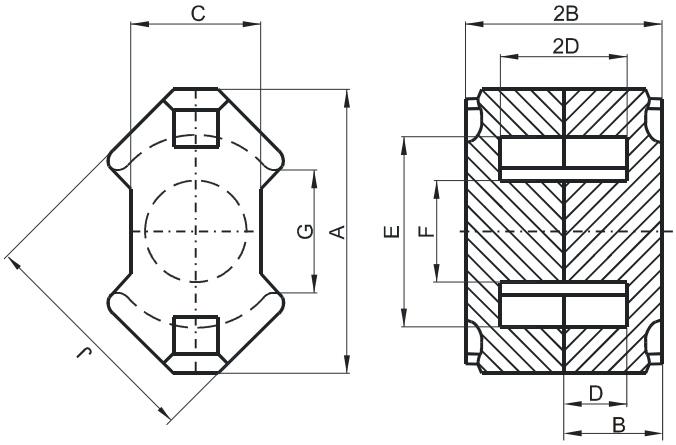

(mm)	Nominal:	Tol. min.:	Tol. max.:
A	11.0	-0.5	0.0
B	5.2	-0.05	+ 0.05
2B	10.4	-0.1	+ 0.1
C	4.6	-0.2	0.0
D	3.5	0.0	+ 0.2
2D	7.0	0.0	+ 0.4
E	7.95	0.0	+ 0.4
F	3.9	-0.2	0.0
G	5.8 Min.		
J	9.8	-0.4	0.0
Eff. Parameters			
Ae mm ^{2}	**Amin mm ^{2}**	**le mm**	**Ve mm ^{3}**
13.8	11.5	23.3	322

INDUCTANCE

AL value (nH)	Test conditions
Nom: 1125 Min.: 844	10 kHz, < 0.5 mT, 25 ℃

MARKING

No marking

CORE LOSSES

P_l max	Test conditions
93 mW/cm³ (0.03 W/set)	100 kHz, 100 mT, 100 ℃
621 mW/cm³ (0.2 W/set)	100 kHz, 200 mT, 100 ℃

NOTE

Spec. modifications	Previous	Revised
2005-06-22	Losses: General R material Marking	Losses: Detail as indicated No marking

A Division of Spang & Company

Specification for:

NW-43723-UG

110 Delta Drive
Pittsburgh, PA 15238
Phone: 412/696-1333
Fax: 412/696-0333
Email:magnetics@spang.com

DIMENSIONS

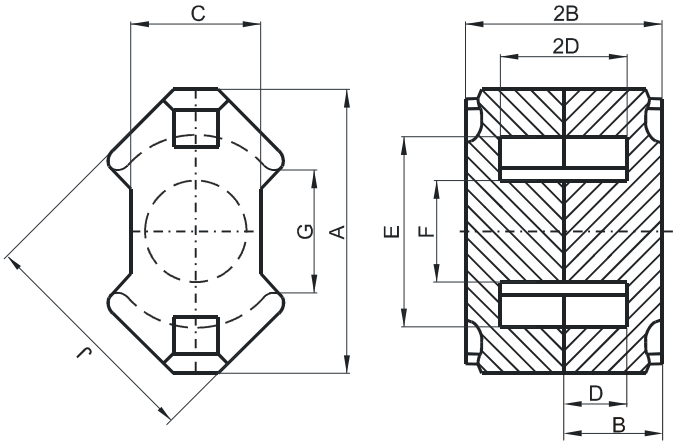

(mm)	Nominal:	Tol. min.:	Tol. max.:
A	37.4	-1.3	0.0
B	12.25	-0.05	+ 0.05
2B	24.5	-0.1	+ 0.1
C	16.1	-0.5	0.0
D	8.4	0.0	+ 0.3
2D	16.8	0.0	+ 0.6
E	24.9	0.0	+ 1.1
F	12.8	-0.4	0.0
G	12.9 Min.		
J	29.8	-1.1	0.0
Eff. Parameters			
Ae mm ^{2}	**Amin mm ^{2}**	**le mm**	**Ve mm ^{3}**
146	125	56.6	8340

INDUCTANCE

AL value (nH)	Test conditions
Nom: 22600 Min.: 15820	10 kHz, < 0.5 mT, 25 ℃

MARKING

No marking

LOSS FACTOR

tan δ/μ (x10^{-6})	Test conditions
< 3.5	10 kHz, < 0.25 mT, 25 ℃
< 50	100 kHz, < 0.25 mT, 25 ℃

NOTE

Spec. modifications	Previous	Revised
2005-06-22	B=11.73±0.05 2B=23.46±0.1 C=15.9 Nom. E=24.99 Min. G=15.2 Nom. Loss factor: General W material Marking	B=12.25±0.05 2B=24.5±0.1 C=16.1 Max. C=15.6 Min. E=24.9 Min. G=12.9 Min. Loss factor: Detail as indicated No marking

A Division of Spang & Company

Specification for:

NF-43723-UG

110 Delta Drive
Pittsburgh, PA 15238
Phone: 412/696-1333
Fax: 412/696-0333
Email:magnetics@spang.com

DIMENSIONS

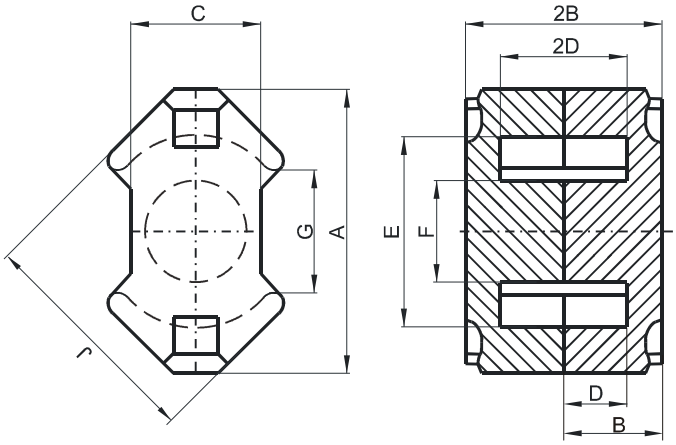

(mm)	Nominal:	Tol. min.:	Tol. max.:
A	37.4	-1.3	0.0
B	12.25	-0.05	+ 0.05
2B	24.5	-0.1	+ 0.1
C	16.1	-0.5	0.0
D	8.4	0.0	+ 0.3
2D	16.8	0.0	+ 0.6
E	24.9	0.0	+ 1.1
F	12.8	-0.4	0.0
G	12.9 Min.		
J	29.8	-1.1	0.0
Eff. Parameters			
Ae mm ^{2}	**Amin mm ^{2}**	**le mm**	**Ve mm ^{3}**
146	125	56.6	8340

INDUCTANCE

AL value (nH)	Test conditions
6000 ± 25%	10 kHz, < 0.5 mT, 25 ℃

MARKING

F
UG

CORE LOSSES

P_l max	Test conditions
216 mW/cm³ (1.8 W/set)	25 kHz, 200 mT, 100 ℃

NOTE

Spec. modifications	Previous	Revised
2005-06-22	B=11.73±0.05 2B=23.46±0.1 C=15.9 Nom. E=24.99 Min. G=15.2 Nom. Losses: General F material	B=12.25±0.05 2B=24.5±0.1 C=16.1 Max. C=15.6 Min. E=24.9 Min. G=12.9 Min. Losses: Detail as indicated

A Division of Spang & Company

Specification for:

NJ-43723-UG

110 Delta Drive
Pittsburgh, PA 15238
Phone: 412/696-1333
Fax: 412/696-0333
Email:magnetics@spang.com

DIMENSIONS

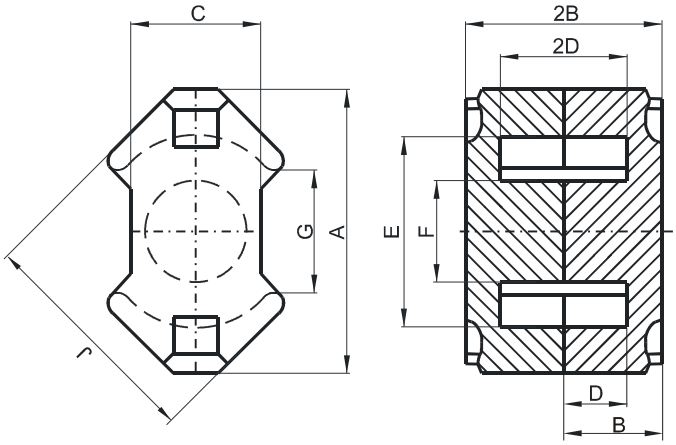

(mm)	Nominal:	Tol. min.:	Tol. max.:
A	37.4	-1.3	0.0
B	12.25	-0.05	+ 0.05
2B	24.5	-0.1	+ 0.1
C	16.1	-0.5	0.0
D	8.4	0.0	+ 0.3
2D	16.8	0.0	+ 0.6
E	24.9	0.0	+ 1.1
F	12.8	-0.4	0.0
G	12.9 Min.		
J	29.8	-1.1	0.0
Eff. Parameters			
Ae mm ^{2}	**Amin mm ^{2}**	**le mm**	**Ve mm ^{3}**
146	125	56.6	8340

INDUCTANCE

AL value (nH)	Test conditions
Nom: 11800 Min.: 8850	10 kHz, < 0.5 mT, 25 ℃

MARKING

No marking

LOSS FACTOR

tan δ/μ (x10^{-6})	Test conditions
< 30	100 kHz, < 0.25 mT, 25 ℃

NOTE

Spec. modifications	Previous	Revised
2005-06-22	B=11.73±0.05 2B=23.46±0.1 C=15.9 Nom. E=24.99 Min. G=15.2 Nom. Loss factor: General J material	B=12.25±0.05 2B=24.5±0.1 C=16.1 Max. C=15.6 Min. E=24.9 Min. G=12.9 Min. Loss factor: Detail as indicated

A Division of Spang & Company

Specification for:

NR-43723-UG

110 Delta Drive
Pittsburgh, PA 15238
Phone: 412/696-1333
Fax: 412/696-0333
Email:magnetics@spang.com

DIMENSIONS

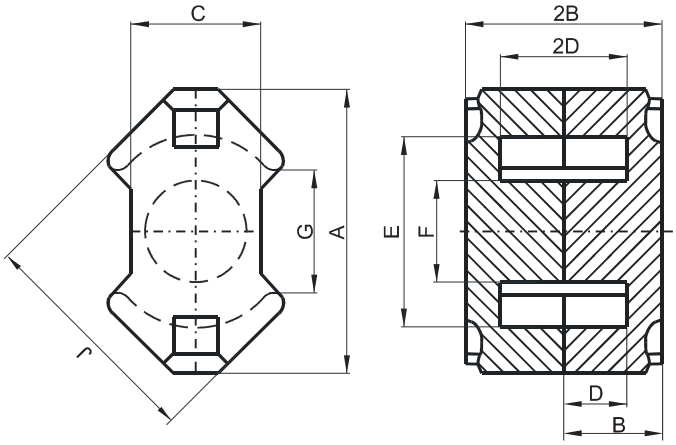

(mm)	Nominal:	Tol. min.:	Tol. max.:
A	37.4	-1.3	0.0
B	12.25	-0.05	+ 0.05
2B	24.5	-0.1	+ 0.1
C	16.1	-0.5	0.0
D	8.4	0.0	+ 0.3
2D	16.8	0.0	+ 0.6
E	24.9	0.0	+ 1.1
F	12.8	-0.4	0.0
G	12.9 Min.		
J	29.8	-1.1	0.0
Eff. Parameters			
Ae mm ^{2}	**Amin mm ^{2}**	**le mm**	**Ve mm ^{3}**
146	125	56.6	8340

INDUCTANCE

AL value (nH)	Test conditions
Nom: 4600 Min.: 3450	10 kHz, < 0.5 mT, 25 ℃

MARKING

R
UG

CORE LOSSES

P_l max	Test conditions
96 mW/cm³ (0.8 W/set)	100 kHz, 100 mT, 100 ℃
540 mW/cm³ (4.5 W/set)	100 kHz, 200 mT, 100 ℃

NOTE

Spec. modifications	Previous	Revised
2005-06-22	B=11.73±0.05 2B=23.46±0.1 C=15.9 Nom. E=24.99 Min. G=15.2 Nom. Losses: General R material	B=12.25±0.05 2B=24.5±0.1 C=16.1 Max. C=15.6 Min. E=24.9 Min. G=12.9 Min. Losses: Detail as indicated

A Division of Spang & Company

Specification for:

NP-43723-UG

110 Delta Drive
Pittsburgh, PA 15238
Phone: 412/696-1333
Fax: 412/696-0333
Email:magnetics@spang.com

DIMENSIONS

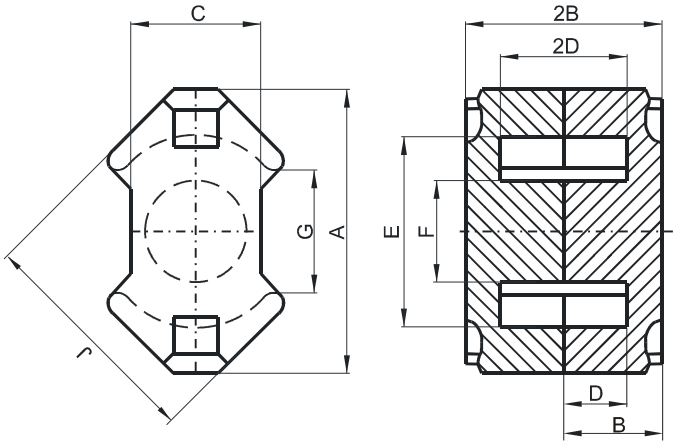

(mm)	Nominal:	Tol. min.:	Tol. max.:
A	37.4	-1.3	0.0
B	12.25	-0.05	+ 0.05
2B	24.5	-0.1	+ 0.1
C	16.1	-0.5	0.0
D	8.4	0.0	+ 0.3
2D	16.8	0.0	+ 0.6
E	24.9	0.0	+ 1.1
F	12.8	-0.4	0.0
G	12.9 Min.		
J	29.8	-1.1	0.0
Eff. Parameters			
Ae mm ^{2}	**Amin mm ^{2}**	**le mm**	**Ve mm ^{3}**
146	125	56.6	8340

INDUCTANCE

AL value (nH)	Test conditions
Nom: 5000 Min.: 3750	10 kHz, < 0.5 mT, 25 ℃

MARKING

P
UG

CORE LOSSES

P_l max	Test conditions
132 mW/cm³ (1.1 W/set)	100 kHz, 100 mT, 100 ℃

NOTE

Spec. modifications	Previous	Revised
2005-06-22	B=11.73±0.05 2B=23.46±0.1 C=15.9 Nom. E=24.99 Min. G=15.2 Nom. Losses: General P material	B=12.25±0.05 2B=24.5±0.1 C=16.1 Max. C=15.6 Min. E=24.9 Min. G=12.9 Min. Losses: Detail as indicated

A Division of Spang & Company

Specification for:

NR-44230-UG

110 Delta Drive
Pittsburgh, PA 15238
Phone: 412/696-1333
Fax: 412/696-0333
Email:magnetics@spang.com

DIMENSIONS

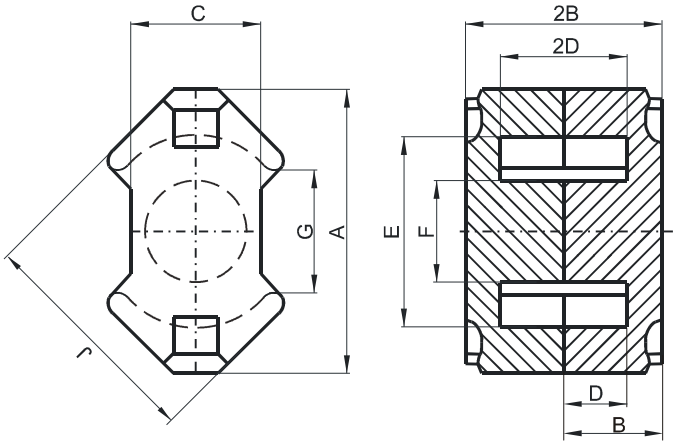

(mm)	Nominal:	Tol. min.:	Tol. max.:
A	42.2	-1.4	0.0
B	15.05	-0.05	+ 0.05
2B	30.1	-0.1	+ 0.1
C	19.0	-0.6	0.0
D	10.4	0.0	+ 0.3
2D	20.8	0.0	+ 0.6
E	29.0	0.0	+ 1.2
F	15.0	-0.6	0.0
G	17.0		
J	34.8	-1.3	0.0
Eff. Parameters			
Ae mm ^{2}	**Amin mm ^{2}**	**le mm**	**Ve mm ^{3}**
198.0	168.0	70.0	13900

INDUCTANCE

AL value (nH)	Test conditions
Nom: 7000 Min.: 5250	10 kHz, < 0.5 mT, 25 ℃

MARKING

R
UG

CORE LOSSES

P_l max	Test conditions
101 mW/cm³ (1.4 W/set)	100 kHz, 100 mT, 100 ℃
532 mW/cm³ (7.4 W/set)	100 kHz, 200 mT, 100 ℃

A Division of Spang & Company

Specification for:

NF-44230-UG

110 Delta Drive
Pittsburgh, PA 15238
Phone: 412/696-1333
Fax: 412/696-0333
Email:magnetics@spang.com

DIMENSIONS

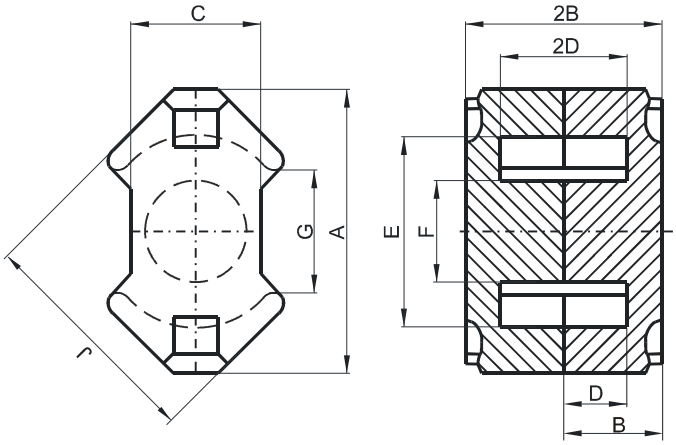

(mm)	Nominal:	Tol. min.:	Tol. max.:
A	42.2	-1.4	0.0
B	15.05	-0.05	+ 0.05
2B	30.1	-0.1	+ 0.1
C	19.0	-0.6	0.0
D	10.4	0.0	+ 0.3
2D	20.8	0.0	+ 0.6
E	29.0	0.0	+ 1.2
F	15.0	-0.6	0.0
G	17.0		
J	34.8	-1.3	0.0
Eff. Parameters			
Ae mm ^{2}	**Amin mm ^{2}**	**le mm**	**Ve mm ^{3}**
198.0	168.0	70.0	13900

INDUCTANCE

AL value (nH)	Test conditions
8782 ± 25%	10 kHz, < 0.5 mT, 25 ℃

MARKING

F
UG

CORE LOSSES

P_l max	Test conditions
230 mW/cm³ (3.2 W/set)	25 kHz, 200 mT, 100 ℃

A Division of Spang & Company

Specification for:

NP-44230-UG

110 Delta Drive
Pittsburgh, PA 15238
Phone: 412/696-1333
Fax: 412/696-0333
Email:magnetics@spang.com

DIMENSIONS

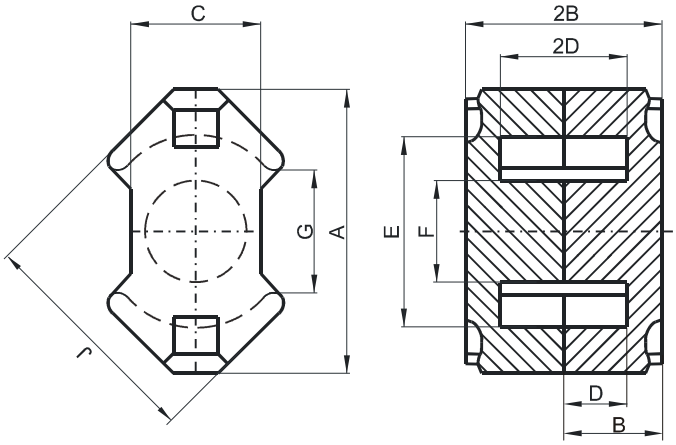

(mm)	Nominal:	Tol. min.:	Tol. max.:
A	42.2	-1.4	0.0
B	15.05	-0.05	+ 0.05
2B	30.1	-0.1	+ 0.1
C	19.0	-0.6	0.0
D	10.4	0.0	+ 0.3
2D	20.8	0.0	+ 0.6
E	29.0	0.0	+ 1.2
F	15.0	-0.6	0.0
G	17.0		
J	34.8	-1.3	0.0
Eff. Parameters			
Ae mm ^{2}	**Amin mm ^{2}**	**le mm**	**Ve mm ^{3}**
198.0	168.0	70.0	13900

INDUCTANCE

AL value (nH)	Test conditions
Nom: 7540 Min.: 5655	10 kHz, < 0.5 mT, 25 ℃

MARKING

P UG

CORE LOSSES

P_l max	Test conditions
127 mW/cm³ (1.76 W/set)	100 kHz, 100 mT, 100 ℃

A Division of Spang & Company

Specification for:

NJ-44230-UG

110 Delta Drive
Pittsburgh, PA 15238
Phone: 412/696-1333
Fax: 412/696-0333
Email:magnetics@spang.com

DIMENSIONS

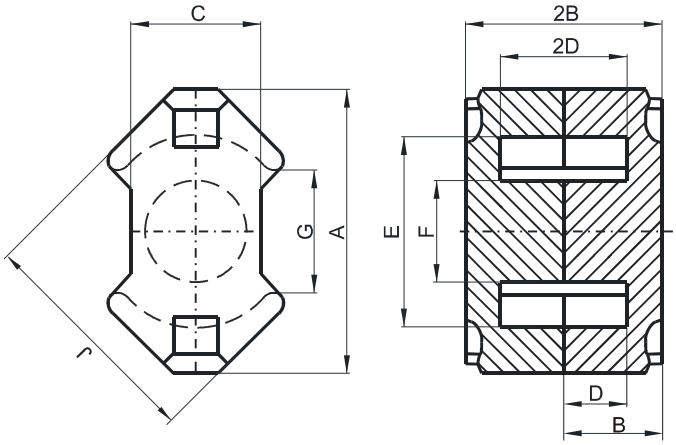

(mm)	Nominal:	Tol. min.:	Tol. max.:
A	42.2	-1.4	0.0
B	15.05	-0.05	+ 0.05
2B	30.1	-0.1	+ 0.1
C	19.0	-0.6	0.0
D	10.4	0.0	+ 0.3
2D	20.8	0.0	+ 0.6
E	29.0	0.0	+ 1.2
F	15.0	-0.6	0.0
G	17.0		
J	34.8	-1.3	0.0
Eff. Parameters			
Ae mm ^{2}	**Amin mm ^{2}**	**le mm**	**Ve mm ^{3}**
198.0	168.0	70.0	13900

INDUCTANCE

AL value (nH)	Test conditions
Nom: 13096 Min.: 9822	10 kHz, < 0.5 mT, 25 ℃

MARKING

No marking

LOSS FACTOR

tan δ/μ (x10^{-6})	Test conditions
< 36	100 kHz, < 0.25 mT, 25 ℃

NOTE

Spec. modifications	Previous	Revised
2005-06-16	Loss factor: General J material	Loss factor: Detail as indicated

A Division of Spang & Company

Specification for:

NW-44230-UG

110 Delta Drive
Pittsburgh, PA 15238
Phone: 412/696-1333
Fax: 412/696-0333
Email:magnetics@spang.com

DIMENSIONS

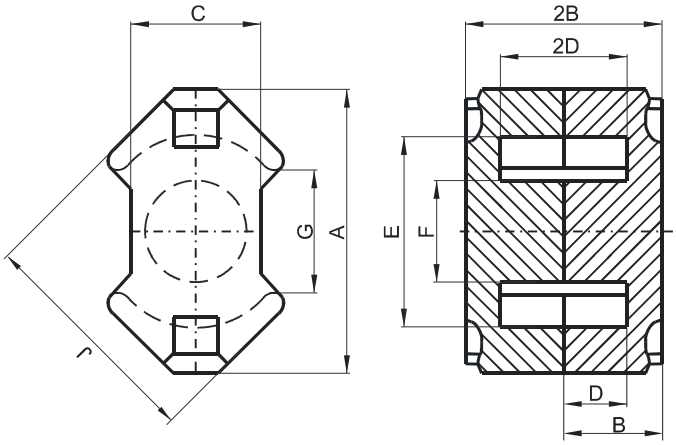

(mm)	Nominal:	Tol. min.:	Tol. max.:
A	42.2	-1.4	0.0
B	15.05	-0.05	+ 0.05
2B	30.1	-0.1	+ 0.1
C	19.0	-0.6	0.0
D	10.4	0.0	+ 0.3
2D	20.8	0.0	+ 0.6
E	29.0	0.0	+ 1.2
F	15.0	-0.6	0.0
G	17.0		
J	34.8	-1.3	0.0
Eff. Parameters			
Ae mm ^{2}	**Amin mm ^{2}**	**le mm**	**Ve mm ^{3}**
198.0	168.0	70.0	13900

INDUCTANCE

AL value (nH)	Test conditions
Nom: 20735 Min.: 14515	10 kHz, < 0.5 mT, 25 ℃

MARKING

No marking

LOSS FACTOR

tan δ/μ (x10^{-6})	Test conditions
< 3.5	10 kHz, < 0.25 mT, 25 ℃
< 50	100 kHz, < 0.25 mT, 25 ℃

A Division of Spang & Company

Specification for:

PR-41010-UG

110 Delta Drive
Pittsburgh, PA 15238
Phone: 412/696-1333
Fax: 412/696-0333
Email:magnetics@spang.com

DIMENSIONS

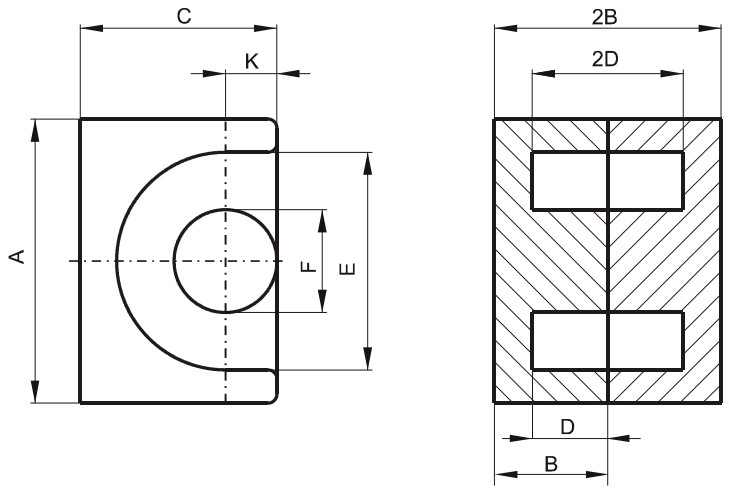

(mm)	Nominal:	Tol. min.:	Tol. max.:
A	11.5	-0.3	+ 0.3
B	5.15	-0.1	+ 0.1
2B	10.3	-0.2	+ 0.2
C	7.6	-0.2	+ 0.2
D	3.6 Min.		
2D	7.2 Min.		
E	9.2 Min.		
F	3.45 Max.		
K	1.85	-0.1	+ 0.1
Eff. Parameters			
Ae mm ^{2}	**Amin mm ^{2}**	**le mm**	**Ve mm ^{3}**
11.3	8.55	19.3	215

INDUCTANCE

AL value (nH)	Test conditions
Nom: 1040 Min.: 780	10 kHz, < 0.5 mT, 25 ℃

MARKING

No marking

CORE LOSSES

P_l max	Test conditions
88 mW/cm³ (0.019 W/set)	100 kHz, 100 mT, 100 ℃
461 mW/cm³ (0.1 W/set)	100 kHz, 200 mT, 100 ℃

NOTE

Spec. modifications	Previous	Revised
2005-06-22	B=5.23 Max. 2B=10.46 Max. C=7.44 Min. Losses: General R material	B=5.25 Max. 2B=10.5 Max. C=7.4 Min. Losses: Detail as indicated

A Division of Spang & Company

Specification for:

PR-41313-UG

110 Delta Drive
Pittsburgh, PA 15238
Phone: 412/696-1333
Fax: 412/696-0333
Email:magnetics@spang.com

DIMENSIONS

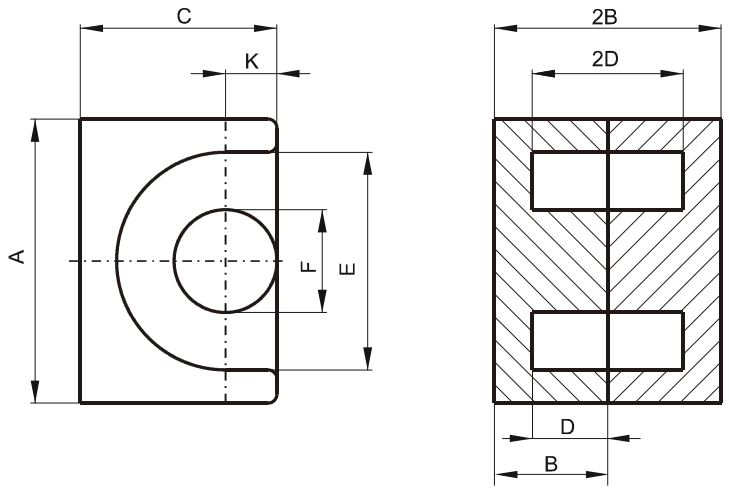

(mm)	Nominal:	Tol. min.:	Tol. max.:
A	12.8	-0.6	0.0
B	6.45	-0.08	+ 0.08
2B	12.9	-0.16	+ 0.16
C	9.0	-0.4	0.0
D	4.5	0.0	+ 0.2
2D	9.0	0.0	+ 0.4
E	9.7	0.0	+ 0.6
F	4.5	-0.3	0.0
K	2.4	-0.1	+ 0.1
Eff. Parameters			
Ae mm ^{2}	**Amin mm ^{2}**	**le mm**	**Ve mm ^{3}**
19.5	14.9	24.2	472

INDUCTANCE

AL value (nH)	Test conditions
Nom: 1533 Min.: 1150	10 kHz, < 0.5 mT, 25 ℃

MARKING

R
UG

CORE LOSSES

P_l max	Test conditions
85 mW/cm³ (0.04 W/set)	100 kHz, 100 mT, 100 ℃
466 mW/cm³ (0.22 W/set)	100 kHz, 200 mT, 100 ℃

NOTE

Spec. modifications	Previous	Revised
2005-06-22	A=12.22 Min. A=12.78 Max. B=6.50 Max. 2B=13.00 Max. E=9.73 Min. Losses: General R material	A=12.2 Min. A=12.8 Max. B=6.53 Max. 2B=13.06 Max. E=9.70 Min. Losses: Detail as indicated

A Division of Spang & Company

Specification for:

PR-41717-UG

110 Delta Drive
Pittsburgh, PA 15238
Phone: 412/696-1333
Fax: 412/696-0333
Email:magnetics@spang.com

DIMENSIONS

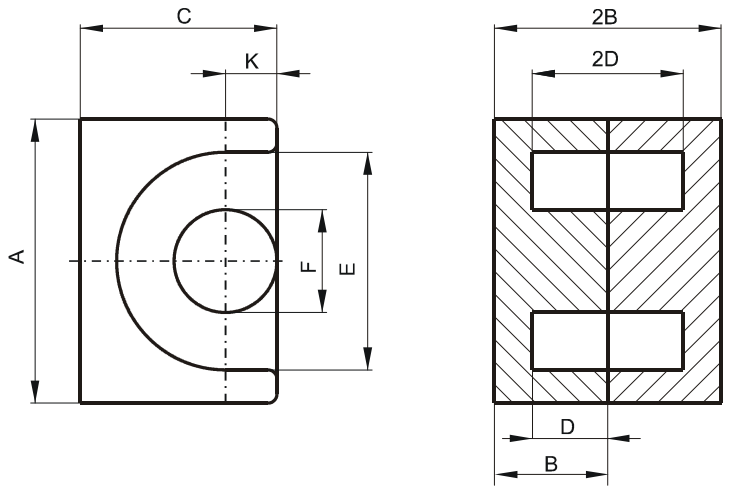

(mm)	Nominal:	Tol. min.:	Tol. max.:
A	18.0	-0.4	+ 0.4
B	8.4	-0.1	+ 0.1
2B	16.8	-0.2	+ 0.2
C	11.0	-0.25	+ 0.25
D	5.7	-0.15	+ 0.15
2D	11.4	-0.3	+ 0.3
E	12.0	-0.4	+ 0.4
F	5.7	-0.18	+ 0.18
K	3.3	-0.2	+ 0.2
Eff. Parameters			
Ae mm ^{2}	**Amin mm ^{2}**	**le mm**	**Ve mm ^{3}**
33.7	25.5	29.5	999

INDUCTANCE

AL value (nH)	Test conditions
Nom: 2387 Min.: 1790	10 kHz, < 0.5 mT, 25 ℃

MARKING

R
UG

CORE LOSSES

P_l max	Test conditions
80 mW/cm³ (0.08 W/set)	100 kHz, 100 mT, 100 ℃
450 mW/cm³ (0.45 W/set)	100 kHz, 200 mT, 100 ℃

NOTE

Spec. modifications	Previous	Revised
2005-06-22	2D=11.18 Min. D=5.59 Min. F=5.84 Max. K=3.25±0.18 Losses: General R material	2D=11.1 Min. D=5.55 Min. F=5.88 Max. K=3.3±0.2 Losses: Detail as indicated

A Division of Spang & Company

Specification for:

RJ-41510-UG

110 Delta Drive
Pittsburgh, PA 15238
Phone: 412/696-1333
Fax: 412/696-0333
Email:magnetics@spang.com

DIMENSIONS

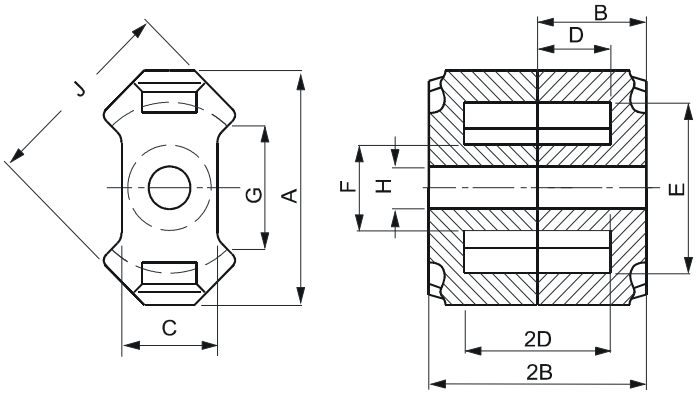

(mm)	Nominal:	Tol. min.:	Tol. max.:
A	14.9 Max.		
B	5.2	-0.05	+ 0.05
2B	10.4	-0.1	+ 0.1
C	6.6 Nom.		
D	3.25	-0.1	+ 0.1
2D	6.5	-0.2	+ 0.2
E	10.4	-0.2	+ 0.2
F	4.8	-0.1	+ 0.1
G	6.71 Nom.		
H	2.05	-0.05	+ 0.05
J	12.05	-0.25	+ 0.25
Eff. Parameters			
Ae mm ^{2}	**Amin mm ^{2}**	**le mm**	**Ve mm ^{3}**
21.0	13.9	21.4	449

INDUCTANCE

AL value (nH)	Test conditions
Nom: 4133 Min.: 3100	10 kHz, < 0.5 mT, 25 ℃

MARKING

No marking

LOSS FACTOR

tan δ/μ (x10^{-6})	Test conditions
< 15	100 kHz, < 0.25 mT, 25 ℃

NOTE

Spec. modifications	Previous	Revised
2005-06-16	Loss factor: General J material Marking	Loss factor: Detail as indicated No Marking

A Division of Spang & Company

Specification for:

RW-41912-UG

110 Delta Drive
Pittsburgh, PA 15238
Phone: 412/696-1333
Fax: 412/696-0333
Email:magnetics@spang.com

DIMENSIONS

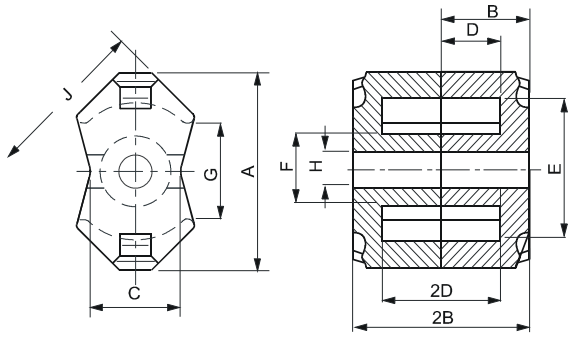

(mm)	Nominal:	Tol. min.:	Tol. max.:
A	18.3 Max.		
B	6.2	-0.05	+ 0.05
2B	12.4	-0.1	+ 0.1
C	8.2 Nom.		
D	4.1	-0.1	+ 0.1
2D	8.2	-0.2	+ 0.2
E	12.65	-0.25	+ 0.25
F	6.25	-0.15	+ 0.15
G	9.0 Nom.		
H	3.05	-0.05	+ 0.05
J	14.4	-0.3	+ 0.3
Eff. Parameters			
Ae mm ^{2}	**Amin mm ^{2}**	**le mm**	**Ve mm ^{3}**
31.0	22.6	27.0	837

INDUCTANCE

AL value (nH)	Test conditions
Nom: 7714 Min.: 5400	10 kHz, < 0.5 mT, 25 ℃

MARKING

No marking

LOSS FACTOR

tan δ/μ (x10^{-6})	Test conditions
< 3.5	10 kHz, < 0.25 mT, 25 ℃
< 50	100 kHz, < 0.25 mT, 25 ℃

NOTE

Spec. modifications	Previous	Revised
2005-06-22	Loss factor: General W material Marking	Loss factor: Detail as indicated No marking

A Division of Spang & Company

Specification for:

SR-41811-UG

110 Delta Drive
Pittsburgh, PA 15238
Phone: 412/696-1333
Fax: 412/696-0333
Email:magnetics@spang.com

DIMENSIONS

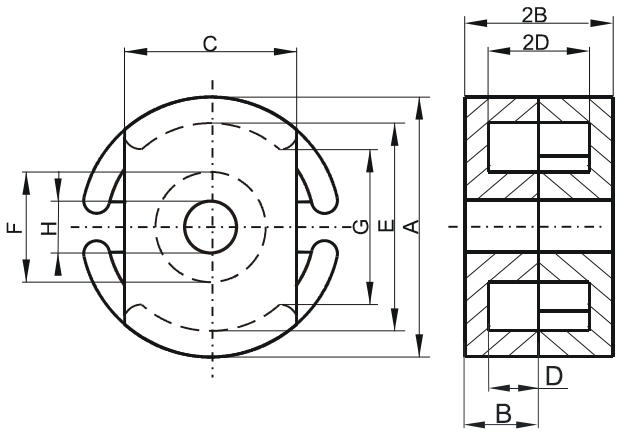

(mm)	Nominal:	Tol. min.:	Tol. max.:
A	18.0	-0.4	+ 0.4
B	5.3	-0.13	+ 0.13
2B	10.6	-0.15	+ 0.15
C	11.9	-0.2	+ 0.2
D	3.7	-0.1	+ 0.1
2D	7.4	-0.2	+ 0.2
E	15.15	-0.25	+ 0.25
F	7.45	-0.15	+ 0.15
G	11.2 Min.		
H	3.1	-0.1	+ 0.1
Eff. Parameters			
Ae mm ^{2}	**Amin mm ^{2}**	**le mm**	**Ve mm ^{3}**
40.6	32.9	27.2	1110

INDUCTANCE

AL value (nH)	Test conditions
Nom: 2942 Min.: 2207	10 kHz, < 0.5 mT, 25 ℃

MARKING

R
UG

CORE LOSSES

P_l max	Test conditions
99 mW/cm³ (0.11 W/set)	100 kHz, 100 mT, 100 ℃
541 mW/cm³ (0.6 W/set)	100 kHz, 200 mT, 100 ℃

A Division of Spang & Company

Specification for:

SW-41811-UG

110 Delta Drive
Pittsburgh, PA 15238
Phone: 412/696-1333
Fax: 412/696-0333
Email:magnetics@spang.com

DIMENSIONS

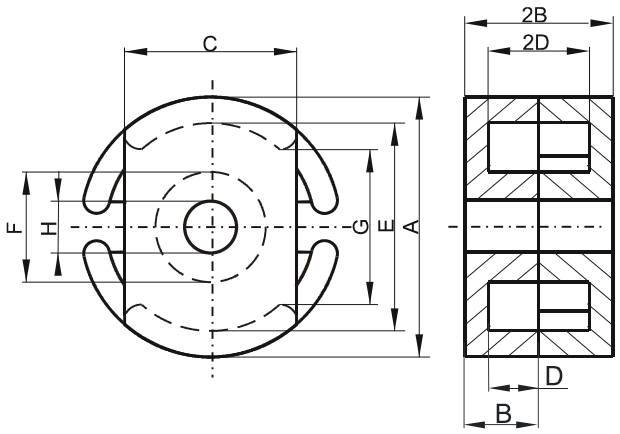

(mm)	Nominal:	Tol. min.:	Tol. max.:
A	18.0	-0.4	+ 0.4
B	5.3	-0.13	+ 0.13
2B	10.6	-0.15	+ 0.15
C	11.9	-0.2	+ 0.2
D	3.7	-0.1	+ 0.1
2D	7.4	-0.2	+ 0.2
E	15.15	-0.25	+ 0.25
F	7.45	-0.15	+ 0.15
G	11.2 Min.		
H	3.1	-0.1	+ 0.1
Eff. Parameters			
Ae mm ^{2}	**Amin mm ^{2}**	**le mm**	**Ve mm ^{3}**
40.6	32.9	27.2	1110

INDUCTANCE

AL value (nH)	Test conditions
Nom: 6194 Min.: 4336	10 kHz, < 0.5 mT, 25 ℃

MARKING

No marking

LOSS FACTOR

tan δ/μ (x10^{-6})	Test conditions
< 3.5	10 kHz, < 0.25 mT, 25 ℃
< 50	100 kHz, < 0.25 mT, 25 ℃

A Division of Spang & Company

Specification for:

SJ-43019-UG

110 Delta Drive
Pittsburgh, PA 15238
Phone: 412/696-1333
Fax: 412/696-0333
Email:magnetics@spang.com

DIMENSIONS

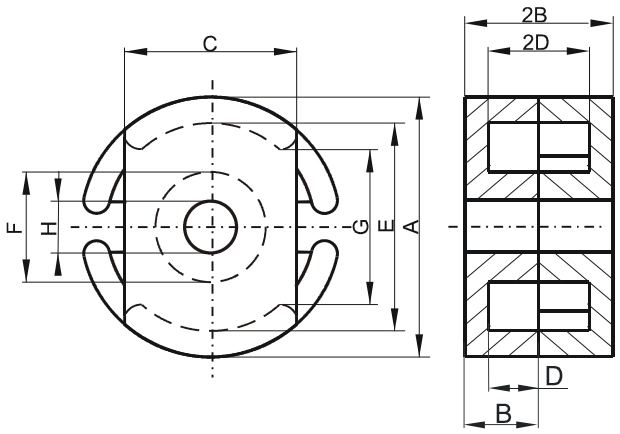

(mm)	Nominal:	Tol. min.:	Tol. max.:
A	30.0	-0.51	+ 0.51
B	9.4	-0.1	+ 0.1
2B	18.8	-0.2	+ 0.2
C	20.32	-0.25	+ 0.25
D	6.5 Min.		
2D	13.0 Min.		
E	25.0 Min.		
F	13.51 Max.		
G	15.49 Min.		
Eff. Parameters			
Ae mm ^{2}	**Amin mm ^{2}**	**le mm**	**Ve mm ^{3}**
123.0	96.0	45.6	5610

INDUCTANCE

AL value (nH)	Test conditions
Nom: 11147 Min.: 8360	10 kHz, < 0.5 mT, 25 ℃

MARKING

No marking

LOSS FACTOR

tan δ/μ (x10^{-6})	Test conditions
< 36	100 kHz, < 0.25 mT, 25 ℃

NOTE

Spec. modifications	Previous	Revised
2005-06-22	Loss factor: General J material Marking	Loss factor: Detail as indicated No Marking