A Division of Spang & Company

Specification for:

00C221314

110 Delta Drive
Pittsburgh, PA 15238
Phone: 412/696-1333
Fax: 412/696-0333
Email:magnetics@spang.com

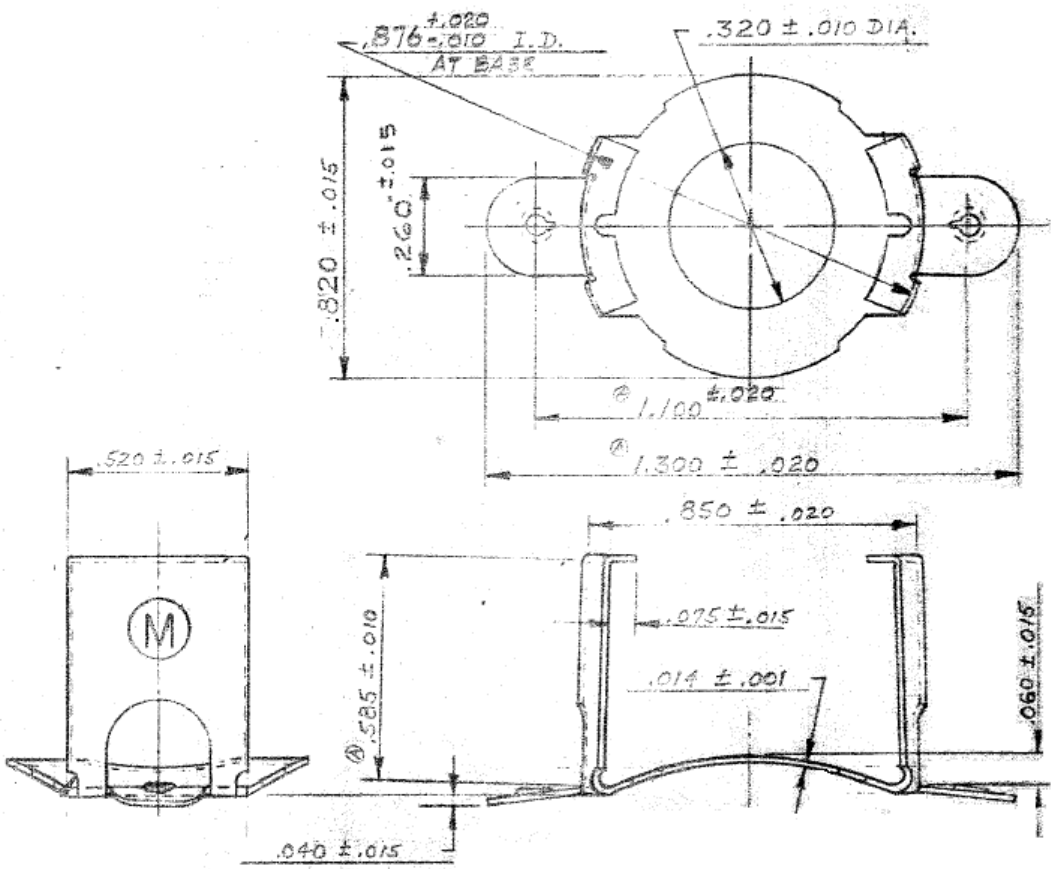

MATERIAL

Material: Heat Treated Spring Steel, Tin Electroplated .00015” to .0002”

REMARKS

Revision A